ENGINEERING APPENDIX A

APPENDIX 5

QUANTITIES – RECOMMENDED PLAN

US Army Corps of Engineers
Galveston District

GIWW Brazos River Floodgates and Colorado River Locks
Final Integrated Feasibility Report and Environmental Impact Statement
Brazos River Floodgates TSP Alt 3a.1 Quantities Estimate

Designed By JR/JK
Checked By DL/GK
2-Oct-2018

Number	Number Description	Quantity	Unit
1	**Mob & Demob**	LUMPSUM	LS
2	**Demolition - Existing Structures for West and East Gates**		
	Remove and Salvage Sector Gate (2 gates, 2 leafs, east & west channel)	182	TN
	Remove and Dispose Gate South Monoliths (2 gates) above EL -15.0	5,112	CY
	Remove and Dispose Timber Piles (2 gates)	0	EA
	Remove Existing Control House and Machinery Buildings	1	LS
	Remove Existing Office Building	1	EA
	Remove Existing Boat House	1	EA
	Remove Existing Generator Building	1	EA
	Remove Sector Gate Machinery	4	EA
	Guide Walls		
	1. Remove and Salvage South Guide Walls (4 walls, east & west channel)	2,052	TN
3	**Excavation and Fill**		
	Move Gates Farther Back in Existing Channel		
	Excavation		
	1. Excavate New West Gate Channel (Shifted South)	417,800	CY
	2. Excavate New East Gate Channel (Shifted South)	484,400	CY
	3. Excavate West South Gate Island	60,600	CY
	4. Excavate East South Gate Island	59,200	CY
	Excavation Total =	1,022,000	CY
	Fill		
	Fill Existing Channel to Create Levee to New East Gate	160,000	CY
	Fill Total =	160,000	CY
4	**Cofferdam (Cofferdam placed around sector gates, 1 gate, 1 dam)**		
	Sheet Piling PZ-35	45,120	SF
	Struts, Wales, Bracing & HP 14x73 Support Piles	2,158,511	LBS
	Tremie Slab	1,834	CY
5	**Concrete Structure and Gate (Quantities are for 1 sector gate, 2 leafs)**		
	Sector Gate Monolith		
	1. Reinforced Concrete Base Slab	12,131	CY
	2. Reinforced Concrete Walls/Monolith	3,667	CY
	3. Piles:		
	a. Pile Tests	LUMPSUM	LS
	b. Pipe Piles - Batter Steel Pipe 30" Dia. X 5/8" Wall	21,648	LF
	c. Sheet Pile Cutoff - PZC13	7,980	SF
	4. Tension Connection	246	EA
	5. Bulkhead Slots - Stainless Steel w/Seals (Embedded in Monolith)	100	LF
	6. Ladder Slots - Stainless Steel w/Ladders (Embedded in Monolith)	50	LF
	Sector Gate		
	1. Sector Gates	359	TN
	2. Pintles and Hinges (King post)	2	LS
	3. Sector Gate Protection Fenders	1,180	LF
	4. Gate Seals, Seal Bearing Surfaces and Gate Track	1	LS
	5. Cathodic Protection	1	LS
6	**Maintenance Dewatering System**		
	Sector Gate Dewatering System (Maintenance Needle Girder / Bulkhead)		
	1. Maintenance Bulkhead	211	TN
	a. Sector Gate Needles (Panels)	129	TN
	b. Sector Gate Needle Girders	63	TN
	c. Sector Gate Needle Girder Vertical Supports	19	TN
	2. Maintenance Bulkhead Storage Platform		
	a. Pile Tests	LUMPSUM	LS
	b. Pile Supports		
	1. Piles - 24" Square Precast Prestressed Concrete	4,800	LF
	c. Reinforced Concrete	576	CY
7	**Guide Walls**		
	Guide Walls (At Gate Area)		

DEMOLITION

Existing Gate:

Each gate (lb) = 364,500 (2 leafs)
Each gate (ton) = 182.3 (2 leafs)
Two leafs removed (ton) = **182.3** (2 south leafs)

Conc. Walls, one gate (cy) = **5,112** Monolith walls, wing walls (Leave concrete in place below EL -15.0)
Contract Bid Documents used 25 feet timber pile length for bidding purposes. **985** Piles per gate (leave in place)

Total weight guide walls, one gate (lb) = **4,323,700** **Quantities based on East Gate Guide Wall take off, Guide Walls B5, B6, B7, B8, West Gate guide wall similar.**
Total weight walls, one gate (ton) = **2,162** Weight is steel material: sheet pile, anchor bar, waler, wall contact, pile cap, tangent plate, fender plate

Wall No	Guide Wall Sht Pile (sf)	Anchor Wall Sht Pile (sf)	Total (sf)	
B5	25,243	12,067	37,310	Leave in place.
B6	21,736	10,076	31,812	Remove.
B7	13,184	6,486	19,670	Leave in place.
B8	13,184	6,486	19,670	Remove.
			108,462	

SEE BOTTOM OF SPREADSHEET FOR EXCAVATION AND FILL QUANTITIES
Excavation Disposal Note: The current plan for the disposal of excavation material is to use the existing placement areas (PA) located along the GIWW. Placement Areas in the vicinity of the Brazos Floodgates were reported to have combined remaining capacity of approximately 20.5 million cubic yards.

Based on Morganza to the Gulf Sector Gate, 125' wide Sector Gate

Brazos Sector Gate 31' x 125' (1 gate, 2 leafs)

(Pile lengths adjusted based on Pile Capacity Curves from MVN 07 May 2018.)

Tip at Elev -110, top at Elev -25 -> (85/4)^2+85^2))^0.5) = 88 LF PILE

The weight per enclosed volume of a sector gate leaf was calculated for several existing projects including the existing Brazos sector gate. The data results are as follows, Brazos 6.2 lb/ft3 (pcf), IHNC 6.7 pcf, and SGCP 4.8 pcf. The average weight per enclosed volume for these projects is 5.9 pcf. The estimated weight of the new Brazos sector gate leaf is based on this similar project average of 5.9 pcf for the proposed 31' x 125' gate. The estimated weight of the proposed sector gate (2 leafs) is 568 tons by using this average unit weight. However, the recent coastal project Morganza to the Gulf had a weight of 359 tons (2 leafs without pintles and hinges) for the exact same size sector gate that will be used for this BRFG project. IHNC refers to the Inner Harbor Navigation Canal project. The top of the gates will match the top of the wall elevation +16.00 NAVD88 which matches the Colorado River Locks, which were recently surveyed.

The maintenance dewatering system similar to that used at the recent Morganza to the Gulf project will be used for both the BRFG and CRL project. Only one set of needles, needle girders and towers for one floodgate will be kept in storage for both the BRFG and CRL sites. The storage site will be at the BRFG site near the new floodgate.

Similar to other Gulf Coast Projects, the guide walls near the sector gates do not need to retain fill soil. Therefore sheet pile guide walls similar to the type currently in use, with the sheet pile face tied back to sheet pile anchors, will not be used for the new guide walls at the sector gate. Open flexible guide walls will be used near the sector gate.

See Demolition Above for Sheet Pile Area Breakout
<=For Existing Wall sections B5, B6, B7, B8

Existing East Guide Wall Lengths (ft)	
Wall section B5	487
B6	408
B7	257
B8	257

Exist.Guide Wall Take Off Weight (lb)	
PZ 35 sheet pile	3,796,100
Anchor bar	170,470
Waler	140,990
Wall contact	29,196

Hardware weight per foot (lb/ft)
375

	1. East Gate North Timber Guide Wall*	240	LF	
	2. East Gate South Timber Guide Wall*	240	LF	
	3. End Cell Dolphins	4	EA	
	*Guide Walls near Sector Gate include 6 horizontal fender rows of 12"x12" Composite			
	Barforce HDPE Composite Marine Timbers with (4) 1"-Dia. FRP Fiberglass Rebar			
	in Each (Bedford Technology or Equal).			
8	**Civil**			
	Excavation Within Cofferdam	23,833	CY	
	E. Levee Rd. Extension w/ Utility Lines	900	LF	
	Riprap for approach channels	14,050	TN	
	Separator Geotextile Below Riprap	7,780	SY	
	Bedding Below Riprap	2,595	CY	
9	**Mechanical**			
	Sector Gate Machinery with Rack and Pinion System	1	LS	
10	**Electrical**	1	LS	
11	**New Control Houses East**			
	Two Story Sector Gate Control House (16' x 16')	1	EA	
	HPU Building	1	EA	
12	**New Administration Building (6000 SF)**			
	CMU Building with Metal Roof	1	EA	
	Concrete Grade Beams and Slab	144	CY	
	Timber Piling	9,450	LF	210 piles, 45' long each
13	**New Warehouse Building (20'x40')**			
	Pre-engineered Metal Building	1	EA	
	Concrete Grade Beams and Slab	45	CY	Prorated based on SF from Warehouse building
	Timber Piling	1,260	LF	28 piles, 45' long each.
14	**New Generator Building (14'x14')**			
	Pre-cast Concrete Building	1	EA	
	Concrete Grade Beams and Slab	11	CY	
	Timber Piling	270	LF	6 piles, 45' long each
15	**New Boat House (50'x50')**			
	Pre-engineered Metal Building	1	EA	
	Concrete Grade Beams and Slab	45	CY	
	Bulkhead Sheet Pile	2,600	SF	Assume sheet pile is 20' long, bulkhead not needed at center deck
	Timber Piling	1,260	LF	28 piles, 45' long each

Assume half concrete of warehouse since boat slips take up space

Total length (ft) =	1,409	
Pile cap		114,870
Tangent wall plate		42,385
Fender plate		29,661
Total Steel Weight (lb) =		4,323,700

Existing Weight per Linear Foot of Sheet Pile Guide Wall (lb/ft) = **3,069**

For Alternative 3a at New Location Farther Back in Existing Channel

	New Guide Wall Lengths (ft)	
East Gate	North	240
	South	240
	Total length (ft) =	480

CHANNEL EXCAVATION

	Location	Area (ft2)	Depth Avg.	Volume (yd3)		
Exist.channel excavated to open channel	West channel Island	60,526	27.0	60,600	478,400	(Channel straightening perpendicular to the river is included in quantities.)
	West channel south	900,000	12.5	417,800		
	East channel Island	59,175	27.0	59,200	543,600	
	East channel south	1,050,000	12.5	484,400		
	Sum =	**2,069,701**	ft2	**1,022,000**	yd3	

FILL EXISTING CHANNEL

	Location	Area (ft2)		Volume (yd3)		
For new gate locations	West channel	0		0		
	East channel	180,000		160,000		
	Sum =	**180,000**	ft2	**160,000**	yd3	Average depth of fill used = 24 ft

US Army Corps of Engineers ®
Galveston District

GIWW Brazos River Floodgates and Colorado River Locks
Final Integrated Feasibility Report and Environmental Impact Statement
Colorado River Locks TSP Alt 4b.1 Quantities Estimate

Designed By JJR
Checked By DPL

Item No.	Item Description	Quantity	Unit	
1	**Mob & Demob**	1	LS	
2	**Demo Existing Structures East & West**			
	Sector Gate Concrete Demolition (South side of East GIWW Gatebay- Walls Only)	2,795	CY	
	Approach Wall Demolition (South side of East GIWW Gatebay- East and West of Gatebay)	4,502	CY	
	Remove Existing Control House and Machinery Buildings	1	LS	
	Remove Existing Office Building	1	EA	
	Remove Existing Boat House	1	EA	
	Remove Existing Generator	1	EA	
	Remove Sector Gate Leaves and Machinery	8	EA	
3	**Excavation East & West**			
	Permanent Channel Excavation	434,012	CY	Assume material goes in PAs 108 and 108a
4	**Two Internally Braced Cofferdams - no dewatering system required**			
	Sheet Piling PZ-35	99,840	SF	See Sheet S-405 for dimensions Tip El-46.0 CRL East, -50.5 CRL West
	Struts, Wales, Bracing & HP 14x73 Support Piles	3,517,750	LBS	
	Tremie Slab	3,667	CY	
5	**Civil for East & West**			
	Excavation Within Cofferdam	47,666	CY	Assume material goes in PAs 108 and 108a
	Granular Backfill	12,329	CY	
	Semi-Compacted Embankment for Access Road/Area	171,460	CY	Includes new access levees
	Separator Geotextile (riprap, training wall, roadway) use areas from Dredge and Civil tabs	30,378	SY	
	Bedding (riprap & training berm)	7,595	CY	
	Riprap Around Gates and Training Wall (1.5 TN/CY)	54,283	TNS	
	Base Course - 6" Base for Access Road/Area	315	CY	
	Roadway Extension - 6" Asphalt for Access Road/Area	315	CY	
	PZ-22 Sheet Piling	15,000	SF	See Sheet S-301. 30' long sheet for rock training wall
6	**Foundation East & West**			
	Sector Gate			
	Pile Tests	2	EA	
	GIWW East 30" Dia. Pipe w/ 5/8" wall	20,418	LF	246 piles, 83' long tip at Elev -105, top at Elev -25 -> (80/4)^2+80^2))^0.5)
	GIWW West 30" Dia. Pipe w/ 5/8" wall	24,108	LF	246 piles, 98' long tip at Elev -120, top at Elev -25 -> (95/4)^2+95^2))^0.5)
	Sheet Pile Cutoff- PZC-13	17,693	SF	21' long sheets x 380.5 LF CRL East, 25.5' long sheets x 380.5 LF CRL West
7	**Structure Concrete for Two**			
	Sector Gate			
	Reinforced slabs	24,262	CY	
	Reinforced walls	7,334	CY	
8	**Structural Steel for East and West**			
	Sector Gates (2 Leaves east and 2 leaves west for quantity total)	1,436,000	LBS	
	Sector Gate Protection Fenders	2,360	LF	
	Pintles and Hinges	4	EA	

US Army Corps of Engineers ®
Galveston District

GIWW Brazos River Floodgates and Colorado River Locks
Final Integrated Feasibility Report and Environmental Impact Statement
Colorado River Locks TSP Alt 4b.1 Quantities Estimate

Designed By JJR
Checked By DPL

Item No.	Item Description	Quantity	Unit	
	Gate Seals, Seal Bearing Surfaces and Gate Track	2	LS	
	Cathodic Protection	2	LS	
9	**Miscellaneous Metals for East & West**			
	2" Diameter XS Pipe Aluminum Handrails	8,806	LBS	
	Miscellaneous Metals	2	LS	
10	**Mechanical for East & West**			
	Sector Gate Machinery	2	EA	
11	**Control Houses East and West**			
	Two Story Sector Gate Control House - 16'16	2	EA	Assume Precast Concrete Structures
	HPU building - 10'x10'	2	EA	Assume Precast Concrete Structures
12	**6,000 SF Office Building - 2 story, 50'x60'**			
	CMU Building with Metal Roof	1	EA	
	Concrete Grade Beams and Slab	144	CY	
	Timber Piling	9,450	LF	210 piles, 45' long each
13	**Warehouse Building - 20'x40'**			
	Pre-engineered Metal Building	1	EA	
	Concrete Grade Beams and Slab	45	CY	
	Timber Piling	1,260	LF	28 piles, 45' long each. Based on Catfish Point Warehouse
14	**Generator Building - 14'x14'**			
	Pre-cast Concrete Building	1	EA	
	Concrete Grade Beams and Slab	11	CY	
	Timber Piling	270	LF	6 piles, 45' long each
15	**Boat House 50'x60' minus boat bays**			
	Pre-engineered Metal Building	1	EA	
	Concrete Grade Beams and Slab	45	CY	Assume half concrete of warehouse since boat slips take up space
	Bulkhead Sheet Pile	2,600	SF	Assume sheet pile is 20' long, bulkhead not needed at center deck
	Timber Piling	1,260	LF	28 piles, 45' long each
16	**Electrical**	2	EA	
17	**Timber Guide Walls 4 Segment East & 4 Segment West**			
	Piles	16,032	LF	
	Composite Timber	8,640	LF	
	Misc Sections Southern Pine	10,100	LF	
18	**End Cell Dolphins 4 East & 4 West**			
	Sheet Piling PS-31	171,118	SF	See Sheet S-404 for details 98' long sheets
	Miscellaneous Metals	301,800	LBS	

US Army Corps of Engineers ®
Galveston District

GIWW Brazos River Floodgates and Colorado River Locks
Final Integrated Feasibility Report and Environmental Impact Statement
Colorado River Locks TSP Alt 4b.1 Quantities Estimate

Designed By JJR
Checked By DPL

Item No.	Item Description	Quantity	Unit	
	Lighweight Fill	3,604	CY	
	Sand Fill	12,504	CY	
	Concrete Cap/Ring	7,110	CY	
	18" Dia. Pipe w/ 3/8" wall	29,700	LF	30 piles, 123.75' longer per dolphin

US Army Corps of Engineers ®
Galveston District

GIWW Brazos River Floodgates and Colorado River Locks

Final Integrated Feasibility Report and Environmental Impact Statement

Colorado River Locks TSP Alt 4b.1 Quantities Estimate

Dredging and Training Wall Rock Quantities

Designed By JJR

Checked By DPL

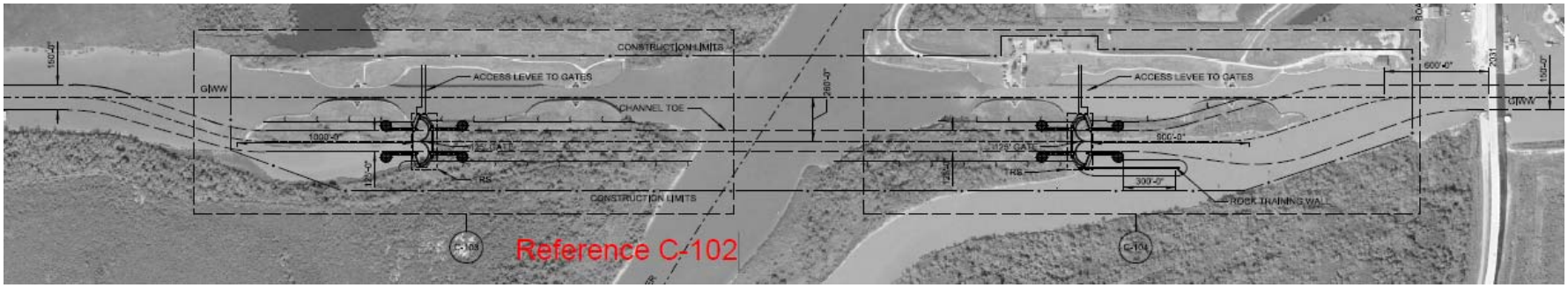

Station	Soil Area	Soil Average End Area	Length	Soil Volume (ft^3)	Soil Volume (CY)	Rock Area	Rock Average End Area	Rock Volume (CY)
14+50	6.00	4.45	50.00	222.50	8.24			
15+00	2.90	3.32	50.00	165.75	6.14			
15+50	3.73	11.49	50.00	574.25	21.27			
16+00	19.24	37.47	50.00	1873.50	69.39			
16+50	55.70	87.51	50.00	4375.25	162.05			
17+00	119.31	175.23	50.00	8761.25	324.49			
17+50	231.14	330.06	50.00	16503.00	611.22			
18+00	428.98	555.88	50.00	27794.00	1029.41			
18+50	682.78	818.22	50.00	40911.00	1515.22			
19+00	953.66	1131.42	50.00	56571.00	2095.22			
19+50	1309.18	1410.61	50.00	70530.50	2612.24			
20+00	1512.04	1640.90	50.00	82045.00	3038.70			
20+50	1769.76	1859.24	50.00	92961.75	3443.03			
21+00	1948.71	2013.47	50.00	100673.25	3728.64			
21+50	2078.22	2119.72	50.00	105986.00	3925.41			
22+00	2161.22	2213.72	50.00	110686.00	4099.48			
22+50	2266.22	2351.34	50.00	117567.00	4354.33			
23+00	2436.46	2484.59	50.00	124229.25	4601.08			
23+50	2532.71	2567.78	50.00	128389.00	4755.15			
24+00	2602.85	2637.43	50.00	131871.25	4884.12			
24+50	2672.00	2713.82	50.00	135690.75	5025.58			
25+00	2755.63	2786.17	50.00	139308.50	5159.57			
25+50	2816.71	2846.71	50.00	142335.25	5271.68			
26+00	2876.70	2892.44	50.00	144621.75	5356.36			
26+50	2908.17	2914.28	50.00	145714.00	5396.81			
27+00	2920.39	2921.44	50.00	146071.75	5410.06			
27+50	2922.48	2920.87	50.00	146043.25	5409.01			

28+00	2919.25	2916.93	50.00	145846.25	5401.71
28+50	2914.60	2914.60	50.00	145730.00	5397.41
46+50	3172.41	3137.38	50.00	156868.75	5809.95
47+00	3102.34	3051.61	50.00	152580.25	5651.12
47+50	3000.87	2953.90	50.00	147695.00	5470.19
48+00	2906.93	2864.13	50.00	143206.25	5303.94
48+50	2821.32	2760.81	50.00	138040.50	5112.61
49+00	2700.30	2636.11	50.00	131805.50	4881.69
49+50	2571.92	2420.63	50.00	121031.50	4482.65
50+00	2269.34	1947.53	50.00	97376.25	3606.53
50+50	1625.71	1319.84	50.00	65992.00	2444.15
51+00	1013.97	829.66	50.00	41483.00	1536.41
51+50	645.35	500.12	50.00	25005.75	926.14
52+00	354.88	277.44	50.00	13872.00	513.78
52+50	200.00	181.00	50.00	9050.00	335.19
53+00	162.00	152.74	50.00	7636.75	282.84
53+50	143.47	152.68	50.00	7634.00	282.74
54+00	161.89	171.68	50.00	8584.00	317.93
54+50	181.47	210.02	50.00	10501.00	388.93
55+00	238.57	302.26	50.00	15113.00	559.74
55+50	365.95	506.38	50.00	25319.00	937.74
56+00	646.81	805.38	50.00	40269.00	1491.44
56+50	963.95	1050.25	50.00	52512.50	1944.91
57+00	1136.55	1207.62	50.00	60380.75	2236.32
57+50	1278.68	1334.57	50.00	66728.50	2471.43
58+00	1390.46	1480.18	50.00	74009.00	2741.07
58+50	1569.90	1639.03	50.00	81951.25	3035.23
59+00	1708.15	1769.13	50.00	88456.25	3276.16
59+50	1830.10	1872.23	50.00	93611.25	3467.08
60+00	1914.35	1928.56	50.00	96428.00	3571.41
60+50	1942.77	2058.06	50.00	102903.00	3811.22
61+00	2173.35	2275.80	50.00	113790.00	4214.44
61+50	2378.25	2399.03	50.00	119951.25	4442.64
62+00	2419.80	2450.99	50.00	122549.50	4538.87
62+50	2482.18	2540.30	50.00	127015.00	4704.26
63+00	2598.42	2671.07	50.00	133553.50	4946.43
63+50	2743.72	2808.67	50.00	140433.25	5201.23
64+00	2873.61	2888.11	50.00	144405.25	5348.34
64+50	2902.60	2911.01	50.00	145550.25	5390.75
65+00	2919.41	2900.17	50.00	145008.50	5370.69
65+50	2880.93	2996.52	50.00	149826.00	5549.11
66+00	3112.11	3085.43	50.00	154271.25	5713.75
66+50	3058.74	3140.60	50.00	157029.75	5815.92
67+00	3222.45	3293.66	50.00	164683.00	6099.37
67+50	3364.87	3383.16	50.00	169158.00	6265.11
68+00	3401.45	3473.92	50.00	173695.75	6433.18
68+50	3546.38	3445.09	50.00	172254.50	6379.80
69+00	3343.80	3284.85	50.00	164242.50	6083.06
69+50	3225.90	3239.64	50.00	161981.75	5999.32

70+00	3253.37	3219.30	50.00	160965.00	5961.67			
70+50	3185.23	3194.89	50.00	159744.25	5916.45			
71+00	3204.54	3172.08	50.00	158603.75	5874.21			
71+50	3139.61	3065.99	50.00	153299.50	5677.76			
72+00	2992.37	2894.23	50.00	144711.25	5359.68			
72+50	2796.08	2709.19	50.00	135459.50	5017.02			
73+00	2622.30	2615.91	50.00	130795.25	4844.27			
73+50	2609.51	2618.16	50.00	130908.00	4848.44			
74+00	2626.81	2650.16	50.00	132508.00	4907.70	138.49	152.345	282.12
74+50	2673.51	2673.51	50.00	133675.50	4950.94	166.2	191.295	354.25
75+00	2673.51	2673.89	50.00	133694.50	4951.65	216.39	243.82	451.52
75+50	2674.27	2688.35	50.00	134417.50	4978.43	271.25	287.755	532.88
76+00	2702.43	2748.87	50.00	137443.50	5090.50	304.26	332.725	616.16
76+50	2795.31	2883.30	50.00	144164.75	5339.44	361.19	389.71	721.69
77+00	2971.28	2806.80	50.00	140339.75	5197.77	418.23	426.125	789.12
77+15	2642.31	2914.51	15.00	43717.65	1619.17	434.02	434.02	241.12
77+50	3186.71	3321.96	35.00	116268.43	4306.24			
78+00	3457.20	3589.65	50.00	179482.50	6647.50			
78+50	3722.10	3640.40	50.00	182020.00	6741.48			
79+00	3558.70	3361.61	50.00	168080.50	6225.20			
79+50	3164.52	3060.69	50.00	153034.25	5667.94			
80+00	2956.85	2917.03	50.00	145851.25	5401.90			
80+50	2877.20	2961.76	50.00	148087.75	5484.73			
81+00	3046.31	3232.56	50.00	161628.00	5986.22			
81+50	3418.81	3519.86	50.00	175992.75	6518.25			
82+00	3620.90	3643.73	50.00	182186.25	6747.64			
82+50	3666.55	3585.78	50.00	179288.75	6640.32			
83+00	3505.00	3268.04	50.00	163401.75	6051.92			
83+50	3031.07	2688.90	50.00	134444.75	4979.44			
84+00	2346.72	1931.43	50.00	96571.50	3576.72			
84+50	1516.14	1225.55	50.00	61277.50	2269.54			
85+00	934.96	934.96	50.00	46748.00	1731.41			
			GRAND TOTAL:		**434,012** CY			**3,989** CY
					Soil			Rock

US Army Corps of Engineers ®
Galveston District

GIWW Brazos River Floodgates and Colorado River Locks
Final Integrated Feasibility Report and Environmental Impact Statement
Brazos River Locks TSP Alt 3a.1 Quantities Estimate
Cofferdam Quantities

Designed By JJR
Checked By DPL

	Material	Length of Row	Number of Rows	Length of Side	Number of Sides	Number of Levels	Weight of Material (lbs/ft)	Total Weight
Struts								
East Cofferdam	20"x5/8"	330	4	NA	NA	1	129.45	170,874.00
		150	10	NA	NA	1	129.45	194,175.00
	14"x5/8"	330	4	NA	NA	2	89.36	235,910.40
		150	10	NA	NA	2	89.36	268,080.00
	12"x3/8"	330	4	NA	NA	1	49.61	65,485.20
		150	10	NA	NA	1	49.61	74,415.00
Walers								
East Cofferdam	W36x300	NA	NA	330	2	1	300	198,000.00
		NA	NA	150	2	1	300	90,000.00
	W33x201	NA	NA	330	2	1	201	132,660.00
		NA	NA	150	2	1	201	60,300.00
	W30x148	NA	NA	330	2	2	148	195,360.00
		NA	NA	150	2	2	148	88,800.00
Bracing								
East Cofferdam	W36x300	NA	NA	29	4	1	300	34,800.00
	W33X201	NA	NA	29	4	1	201	23,316.00
	W30x148	NA	NA	29	4	2	148	34,336.00
HP W14x73 Support Piles								
East Cofferdam	W14x73	100	40	NA	NA	NA	73	292,000.00

GRAND TOTAL: 2,158,511.60

LOCATION	"A"	"B"	"C"	"D"	"E"	"F"	"G"	"H"	"I"	"J"	"K"	"L"	"M"	"N"
COLORADO EAST	EL. -3.0	EL. -9.0	EL. -14.0	EL. -19.0	EL. -26.0	EL. -42.0	W30x148	W30x148	W30x148	W36x260	PZ-35	16"x5/8"	12"X3/8"	12"X3/8"
COLORADO WEST	EL. -3,0	EL. -9,0	EL. -14,0	EL. -19,0	EL. -26,0	EL. -48,0	W30x148	W30x148	W30x148	W36x260	PZ-35	16"x5/8"	14"X5/8"	12"X3/8"
BRAZOS EAST	EL. -3.0	EL. -9,0	EL. -14.0	EL. -19.0	EL. -26.0	EL. -40.0	W30x148	W30x148	W33x201	W36x300	PZ-35	20"x5/8"	12"X3/8"	12"X3/8"

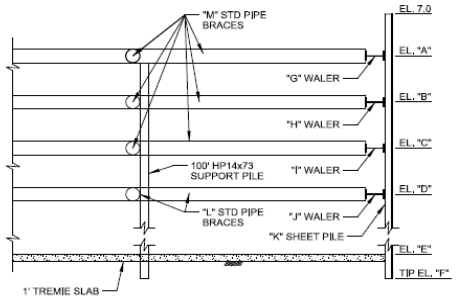

C1 SECTION
SCALE: ¼" = 1'-0"

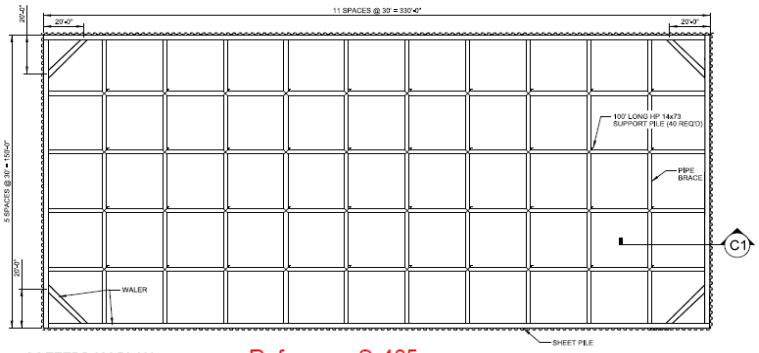

COFFERDAM PLAN
SCALE: 1" = 20'

Reference S-405

US Army Corps of Engineers ®
Galveston District

GIWW Brazos River Floodgates and Colorado River Locks
Final Integrated Feasibility Report and Environmental Impact Statement
Colorado River Locks TSP Alt 4b.1 Quantities Estimate
Cofferdam Quantities

Designed By JJR
Checked By DPL

LOCATION	"A"	"B"	"C"	"D"	"E"	"F"	"G"	"H"	"I"	"J"	"K"	"L"	"M"	"N"
COLORADO EAST	EL. -3.0	EL. -9.0	EL. -14.0	EL. -19.0	EL. -26.0	EL. -42.0	W30x148	W30x148	W30x148	W36x260	PZ-35	16"x5/8"	12"X3/8"	12"X3/8"
COLORADO WEST	EL. -3.0	EL. -9.0	EL. -14.0	EL. -19.0	EL. -26.0	EL. -48.0	W30x148	W30x148	W30x148	W36x260	PZ-35	16"x5/8"	14"X5/8"	12"X3/8"
BRAZOS EAST	EL. -3.0	EL. -9.0	EL. -14.0	EL. -19.0	EL. -26.0	EL. -40.0	W30x148	W30x148	W33x201	W36x300	PZ-35	20"x5/8"	12"X3/8"	12"X3/8"

	Material	Length of Row	Number of Rows	Length of Side	Number of Sides	Number of Levels	Weight of Material (lbs/ft)	Total Weight
Struts								
East Cofferdam	16"x5/8"	330	4	NA	NA	1	102.72	135,590.40
		150	10	NA	NA	1	102.72	154,080.00
	12"x3/8"	330	4	NA	NA	3	49.61	196,455.60
		150	10	NA	NA	3	49.61	223,245.00
West Cofferdam	16"x5/8"	330	4	NA	NA	1	102.72	135,590.40
		150	10	NA	NA	1	102.72	154,080.00
	12"x3/8"	330	4	NA	NA	3	49.61	196,455.60
		150	10	NA	NA	3	49.61	223,245.00
Walers								
East Cofferdam	W36x260	NA	NA	330	2	1	260	171,600.00
		NA	NA	150	2	1	260	78,000.00
	W30x148	NA	NA	330	2	3	148	293,040.00
		NA	NA	150	2	3	148	133,200.00
West Cofferdam	W36x260	NA	NA	330	2	1	260	171,600.00
		NA	NA	150	2	1	260	78,000.00
	W30x148	NA	NA	330	2	3	148	293,040.00
		NA	NA	150	2	3	148	133,200.00
Bracing								
East Cofferdam	W36x260	NA	NA	29	4	1	260	30,160.00
	W30x148	NA	NA	29	4	3	148	51,504.00
West Cofferdam	W36x260	NA	NA	29	4	1	260	30,160.00
	W30x148	NA	NA	29	4	3	148	51,504.00
HP W14x73 Support Piles								
East Cofferdam	W14x73	100	40	NA	NA	NA	73	292,000.00
West Cofferdam	W14x73	100	40	NA	NA	NA	73	292,000.00
							GRAND TOTAL:	**3,517,750.00**

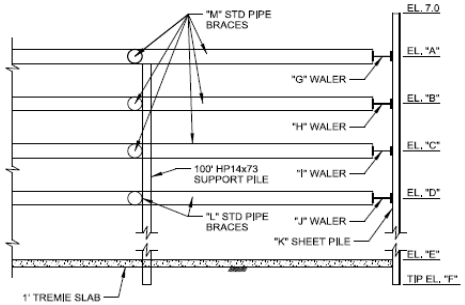

C1 SECTION
SCALE: 3/8" = 1'-0"

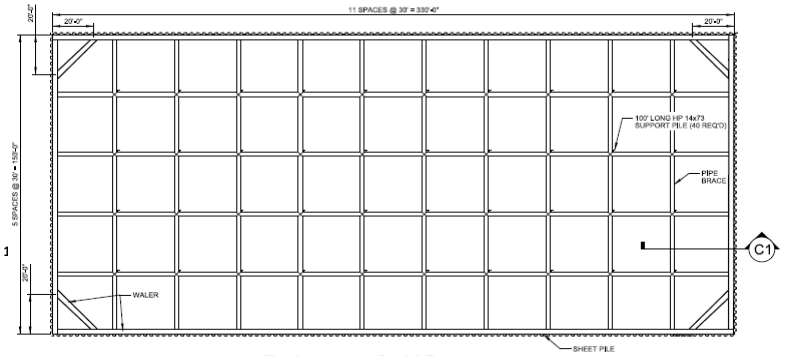

COFFERDAM PLAN
SCALE: 1" = 20'

Reference S-405

US Army Corps of Engineers
Galveston District

GIWW Brazos River Floodgates and Colorado River Locks
Final Integrated Feasibility Report and Environmental Impact Statement
Colorado River Locks TSP Alt 4b.1 Quantities Estimate
Concrete Quantities for Buildings

Designed By JJR
Checked By DPL

- fill cell once to propagate sheet

	Width of Slab (ft)	Length of Slab (ft)	Thickness of slab (ft)	Width of grade Beam (ft)	Depth of Grade Beam(ft)	Length of Grade Beam (ft)	Number of Grade Beams (each)	Total (ft^3)	Total Concrete (CY)
Admin Building	50.00	60.00	0.50	2.00	2.00	60.00	10.00	3900.00	144.44

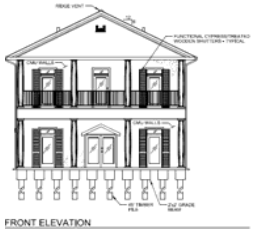
FRONT ELEVATION

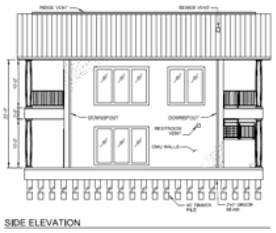
SIDE ELEVATION

	Width of Slab (ft)	Length of Slab (ft)	Thickness of slab (ft)	Width of grade Beam (ft)	Depth of Grade Beam(ft)	Length of Grade Beam (ft)	Number of Grade Beams (each)	Total (ft^3)	Total Concrete (CY)
Warehouse Building	20.00	40.00	0.50	2.00	2.00	40.00	4.00	1040.00	38.52

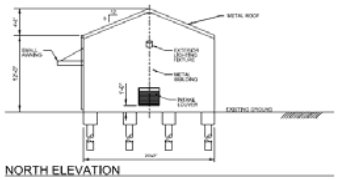
NORTH ELEVATION

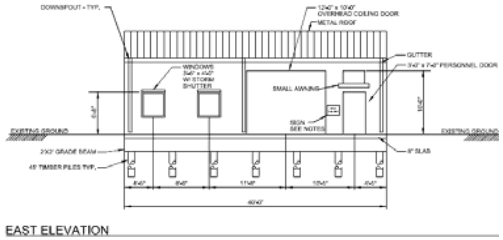
EAST ELEVATION

	Width of Slab (ft)	Length of Slab (ft)	Thickness of slab (ft)	Width of grade Beam (ft)	Depth of Grade Beam(ft)	Length of Grade Beam (ft)	Number of Grade Beams (each)	Total (ft^3)	Total Concrete (CY)
Generator Building	14.00	14.00	0.50	2.00	2.00	14.00	3.00	266.00	9.85

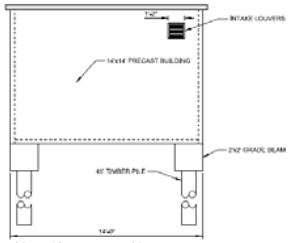
RIGHT SIDE ELEVATION

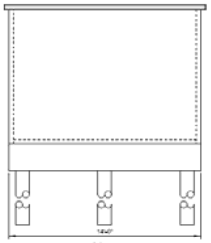
REAR ELEVATION

	Width of Slab (ft)	Length of Slab (ft)	Thickness of slab (ft)	Width of grade Beam (ft)	Depth of Grade Beam(ft)	Length of Grade Beam (ft)	Number of Grade Beams (each)	Total (ft^3)	Total Concrete (CY)
Boat House Building	50.00	15.00	0.50	2.00	2.00	60.00	3.00	1095.00	40.56
	5.00	45.00	0.50					112.50	4.17
								EXCAVATION GRAND TOTAL:	**45**

**** subtract boat bays areas from slab**

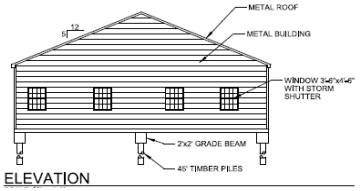

ELEVATION

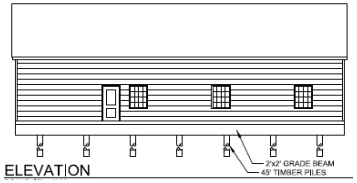

ELEVATION

US Army Corps of Engineers
Galveston District

GIWW Brazos River Floodgates and Colorado River Locks
Final Integrated Feasibility Report and Environmental Impact Statement
Colorado River Locks TSP Alt 4b.1 Quantities Estimate
Civil Quantities

Designed By JJR
Checked By DPL

- fill cell once to propagate sheet

Excavation Within Cofferdam	Width of Cofferdam (ft)	Length of Cofferdam (ft)	Existing Channel Elevation	Cut Elevation for Construction	Total (ft^3)	Total (CY)
East Gate	330.00	150.00	-15.00	-28.00	643500.00	23833.33
West Gate	330.00	150.00	-15.00	-28.00	643500.00	23833.33
					EXCAVATION GRAND TOTAL:	47,667

Grannular Backfill	Width of Cofferdam (ft)	Length of Cofferdam (ft)	Width of Slab/ structure (ft)	Length of Slab/ structure (ft)	Area of Cofferdam (ft^2)	Area of Slab (ft^2)	Area of Granular Fill (ft^2)	Top of Tremie Elevation	Top of Slab Elevation	Total (ft^3)	Total (CY)
East Gate	330.00	150.00	310.50	117.75	49500.00	32856.38	16643.63	-26.00	-16.00	166436.25	6164.31
West Gate	330.00	150.00	310.50	117.75	49500.00	32856.38	16643.63	-26.00	-16.00	166436.25	6164.31
										GRANDULAR BACKFILL GRAND TOTAL:	12,329

Rip Rap	Width of Structure (ft)	Extent of Rip Rap from structure (ft)	Depth of Rip Rap (ft)	Sections of Rip Rap, full Width	Area of Rip Rap (ft^2)	Depth of Beding Stone (ft)	Bedding Stone Total (ft^3)	Bedding Stone Total (CY)	Rip Rap Total (ft^3)	Rip Rap Total (CY)
East Gate	310.50	200.00	3.50	2.00	124200.00	0.75	93150.00	3450.00	434700.00	16100.00
West Gate	310.50	200.00	3.50	2.00	124200.00	0.75	93150.00	3450.00	434700.00	16100.00
									RIP RAP (ONLY) GRAND TOTAL:	32,200

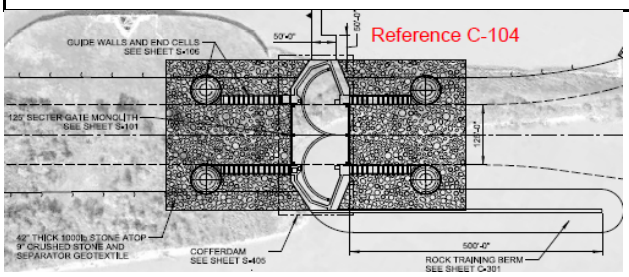

Sheet Pile for Training Berm	Length of Training Berm (ft)	Top of Sheet Pile Elevation	Tip Elevation	Total (ft^2)
East Gate	500.00	4.00	-26.00	15000.00
				15,000

Roadway Base	Width of Access Area (ft)	Length of Access Area (ft)	Height of Base at Access Area (ft)	Access Area Area Total (ft^2)	Access Area Volume Total (ft^3)	Width of Access Levee (ft)	Length of Access Levee (ft)	Height of Base at Access Levee (ft)	Access Levee Area Total (ft^2)	Access Levee Volume Total (ft^3)	Total (CY)
East Gate	50.00	50.00	0.50	2500.00	1250.00	20.00	300.00	0.50	6000.00	3000.00	157.41
West Gate	50.00	50.00	0.50	2500.00	1250.00	20.00	300.00	0.50	6000.00	3000.00	157.41
										GRAND TOTAL:	315

Roadway Asphalt	Width of Access Area (ft)	Length of Access Area (ft)	Height of Asphalt at Access Area (ft)	Access Area Area Total (ft^2)	Access Area Volume Total (ft^3)	Width of Access Levee (ft)	Length of Access Levee (ft)	Height of Asphalt at Access Levee (ft)	Access Levee Area Total (ft^2)	Access Levee Volume Total (ft^3)	Total (CY)
East Gate	50.00	50.00	0.50	2500.00	1250.00	20.00	300.00	0.50	6000.00	3000.00	157.41
West Gate	50.00	50.00	0.50	2500.00	1250.00	20.00	300.00	0.50	6000.00	3000.00	157.41
										GRAND TOTAL:	315

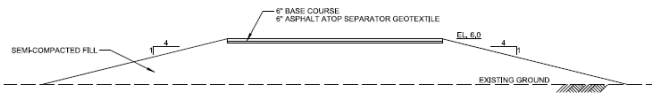

TYPICAL SECTION - ACCESS ROAD AT STRUCTURE Reference C-301

US Army Corps of Engineers ®
Galveston District

GIWW Brazos River Floodgates and Colorado River Locks
Final Integrated Feasibility Report and Environmental Impact Statement
Colorado River Locks TSP Alt 4b.1 Quantities Estimate
Reservation Fill

Designed By JJR
Checked By DPL

Colorado East	a (FT)	b (FT)	h (FT)	Trap Area (SF)	Base	Top	Length	Multiplier	Fill (CY)
Main Trapezod (1)	200	450	200	65000	-15	12			65,000.0
Shore Trapezoid (2)	280	320	120	36000	2	12			13,333.3
Path	20	320		6400	12	16			948.1
Area Adjacent Gate	50	50		2500	12	16			370.4
Triangle Under Water (3)		45	15	337.5			320	1.33	5,320.0
Triangle at Path		16	4	32			320	2	758.5
								SUBTOTAL:	85,730.4

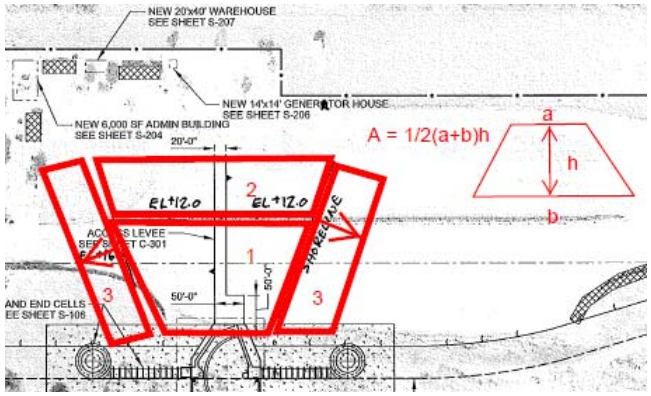

Colorado West	a (FT)	b (FT)	h (FT)	Trap Area (SF)	Base	Top	Length	Multiplier	Fill (CY)
Main Trapezod (1)	200	450	200	65000	-15	12			65,000.0
Shore Trapezoid (2)	280	320	120	36000	2	12			13,333.3
Path	20	320		6400	12	16			948.1
Area Adjacent Gate	50	50		2500	12	16			370.4
Triangle Under Water (3)		45	15	337.5			320	1.33	5,320.0
Triangle at Path		16	4	32			320	2	758.5
								SUBTOTAL:	85,730.4

Brazos East	a (FT)	b (FT)	h (FT)	Trap Area (SF)	Base	Top	Length	Multiplier	Fill (CY)
Main Triangle (1)		550	550	151250	-15	12			151,250.0
Shore Trapezoid (2)	700	800	75	56250	-7.5	12			40,625.0
Path	20	350		7000	12	16			1,037.0
Area Adjacent Gate	175	175		30625	12	16			4,537.0
Triangle Under Water (3)		45	15	337.5			550	2	13,750.0
Triangle at Path		16	4	32			350	2	829.6
								SUBTOTAL:	212,028.7
								TOTAL:	**383,489.4**

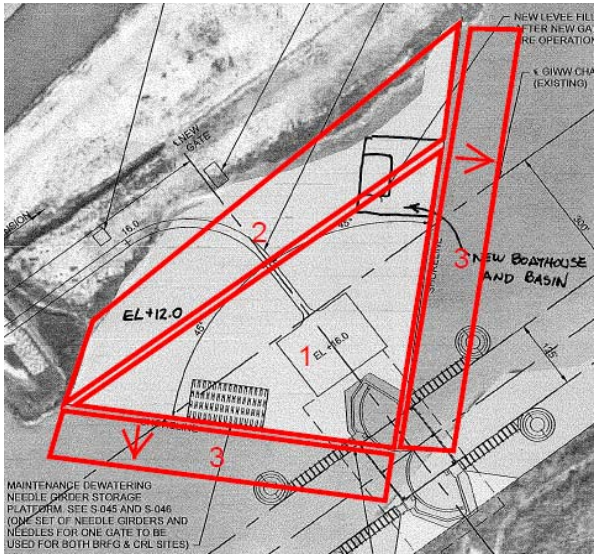

US Army Corps of Engineers ®
Galveston District

GIWW Brazos River Floodgates and Colorado River Locks

Final Integrated Feasibility Report and Environmental Impact Statement

Colorado River Locks TSP Alt 4b.1 Quantities Estimate

Guidewall Quantities

Designed By JJR

Checked By DPL

One Typical Gate

Number of Guidewall Segments

4

Timber Items	Length per Segment	Each	Number of Each Segment	Levels per Segment	Total LF for All 4 Segments
12"x12" Fenders Composite	120.00	1.00	1.00	9.00	**4320.00**
12"x12" Select South Pine	120.00	1.00	1.00	2.00	**960.00**
6"x10" Select South Pine	16.00	2.00	1.00	2.00	**256.00**
10"x10" Select South Pine	15.00	2.00	11.00	2.00	**2640.00**
8"x8" Select South Pine	18.00	1.00	12.00	1.00	**864.00**
8"x12" Splices	2.50	3.00	11.00	1.00	**330.00**
Timber Piles	**Length**			**Number of Sections per Segment**	**Total LF for All 4 Segments**
Vertical Treated ASTM D25	75.00			12.00	3600.00
Batter Treated ASTM D25	75.00			12.00	3600.00
Pole Select Southern Pine	17.00			12.00	816.00
				GRAND TOTAL:	**8016.00**

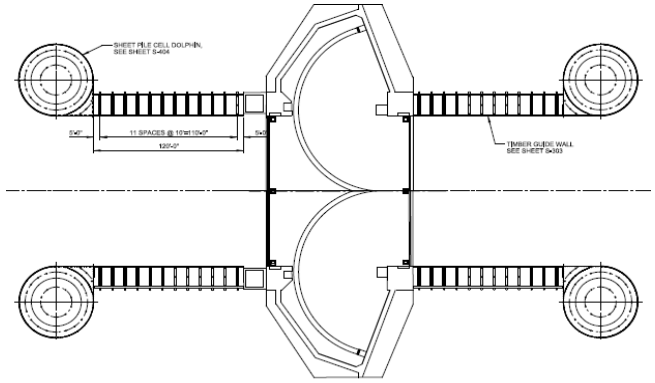

GUIDEWALL PLAN

Reference S-106

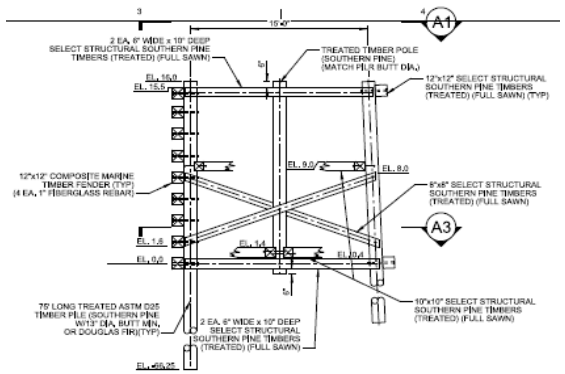

C3 SECTION

Reference S-303

US Army Corps of Engineers®
Galveston District

GIWW Brazos River Floodgates and Colorado River Locks
Final Integrated Feasibility Report and Environmental Impact Statement
Colorado River Locks TSP Alt 4b.1 Quantities Estimate
End Cell Quantities

Designed By JJR
Checked By DPL

Sheet Pile

Item	Quantity	Length (lf)	Width (lf)	Area (sf)
PS31 Sheet Pile	4	92.00	232.50	85559.00

Dolphin Fill

Item	Quantity	Area (ft^2)	Height (lf)	Volume (cy)
Granular Backfill	4	3014.43	14.00	6252.16

Lightweight Dolphin Fill

Item	Quantity	Area (ft^2)	Height (lf)	Volume (cy)
Lightweight Fill	4	1520.53	8.00	1802.11

Miscellaneous Metals

Item	Quantity	Length (lf)	Weight/lf (lb/lf)	Total Weight (lb)
1" x 6" F.B. Straps	36	129.25	20.40	94922
8" x 8" x 1 ¾" Filler Plates	1764	0.67	47.60	55978
			TOTAL:	150900

Pipe Piles

Item	Quantity	Length (lf)	Total Length (lf)
18" X1/2" Pipe Piles	120	123.75	14850.00

Concrete

Item	Quantity	Area (ft^2)	Height (lf)	Volume (cy)
Wall Concrete	4	1493.00	8.00	1769.48
Slab Concrete	4	3014.43	4.00	1786.33

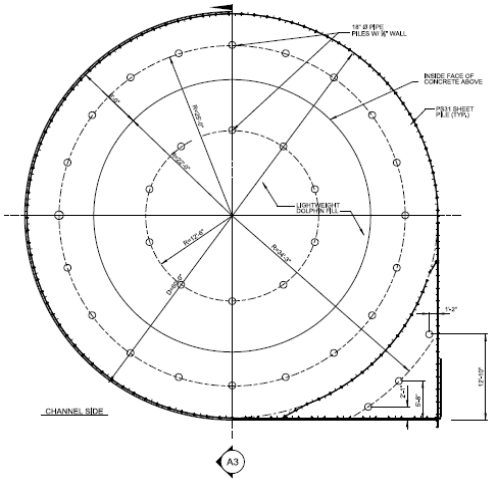

DOLPHIN PLAN

Reference S-404

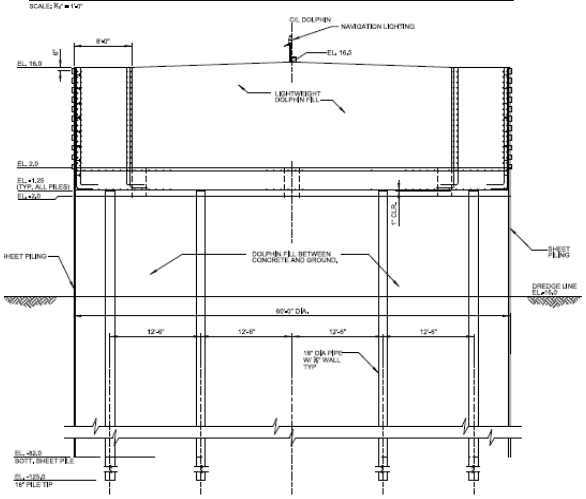

A3 SECTION

125' STEEL SECTOR GATE QUANTITIES

$TOS_{175} := -16.0$ *Top of Sill*

$TOW_{175} := 16.0$ *Top of Wall*

$EL_{lowwater175} := -1.0$ *Low water elevation*

$EL_{175frame1} := 15.0$ *Elevation of top frame*

$EL_{175frame2} := 0$ *Elevation of middle frame*

$EL_{175frame3} := -15.0$ *Elevation of bottom frame*

$R_{gate175} := 71.5ft$ *Radius of gate*

$Angle_{gate175} := 70$ *Angle of gate*

$\gamma_{st} := 490pcf$ Weight of Steel

$s_{int} := 2ft$ Spacing of Intercostals

A. SKIN PLATE

$T_{upperskpl175} := \frac{3}{8}in$ *Thickness of upper skin plate*

$T_{lowerskpl175} := \frac{3}{8}in$ *Thickness of lower skin plate*

$ArcLen_{skpl175} := \left(\frac{Angle_{gate175}}{360} \cdot 2 \cdot \pi\right) \cdot R_{gate175} = 87.354\,ft$ *Arc Length of Skin Plate*

$Wt_{upperskpl175} := T_{upperskpl175} \cdot (TOW_{175} - EL_{175frame2}) \cdot ft \cdot ArcLen_{skpl175} \cdot \gamma_{st} = 21.402\,kip$

$Wt_{lowerskpl175} := T_{lowerskpl175} \cdot (EL_{175frame2} - TOS_{175}) \cdot ft \cdot ArcLen_{skpl175} \cdot \gamma_{st} = 21.402\,kip$

$Wt_{totskpl} := Wt_{upperskpl175} + Wt_{lowerskpl175} = 42.803 \cdot kip$

B. INTERCOSTALS

$Wt_{upperint175} := 24.2 \frac{lbf}{ft}$ *Weight of upper intercostal L8X4X5/8*

$Wt_{lowerint175} := 28.7 \frac{lbf}{ft}$ *Weight of lower intercostal L8X4X3/4*

$$No_{int175} := round\left(\frac{ArcLen_{skpl175}}{s_{int}}\right) = 44$$

$$Wt_{int} := Wt_{upperint175} \cdot (TOW_{175} - EL_{175frame2}) \cdot ft \cdot No_{int175} \ldots = 37.242 \cdot kip$$
$$+ Wt_{lowerint175} \cdot (EL_{175frame2} - TOS_{175}) \cdot ft \cdot No_{int175}$$

C. HORIZONTAL AND VERTICAL GIRDERS & FRAME MEMBERS

$Wt_{uppergird175} := 115 \frac{lbf}{ft}$ *Weight of upper horizontal girder*

$Wt_{middlegird175} := 115 \frac{lbf}{ft}$ *Weight of middle horizontal girder*

$Wt_{lowergird175} := 115 \frac{lbf}{ft}$ *Weight of lower horizontal girder*

$Wt_{vertgird175} := 115 \frac{lbf}{ft}$ *Weight of vertical girder*

$No_{vertgird175} := 5$ *Number of vertical girders*

$$Wt_{horizgir175} := ArcLen_{skpl175} \cdot (Wt_{middlegird175} + Wt_{uppergird175} + Wt_{lowergird175}) = 30.137\ kip$$

$$Wt_{vertgir175} := Wt_{vertgird175} \cdot No_{vertgird175} \cdot (TOW_{175} - TOS_{175}) \cdot ft = 18.4\ kip$$

$Length_{horframe175} := 669ft$ *Length of horizontal frame members from STAAD*

$Length_{diagtruss175} := 1446ft$ *Length of diagional truss members from STAAD*

$Wt_{horframe175} := 138 \frac{lbf}{ft}$ *Weight of horizontal frame members 18" Pipe w/ 1" Walls*

$Wt_{diagtruss175} := 49.5 \frac{lbf}{ft}$ *Weight of diagonal truss members 12" Std Pipe*

$Wt_{tothorframe175} := Length_{horframe175} \cdot Wt_{horframe175} = 92.322\ kip$

$Wt_{totdiagtruss175} := Length_{diagtruss175} \cdot Wt_{diagtruss175} = 71.577\ kip$

$Wt_{members} := Wt_{horizgir175} + Wt_{vertgir175} + Wt_{tothorframe175} \ldots = 212.436\ kip$
$+ Wt_{totdiagtruss175}$

D. HINGE AND PINTLE COMPONENTS

$Wt_{hinpin} := 92.75 kip$

E. WALKWAY COMPONENTS

$Length_{walkway175} := R_{gate175} \cdot 2 + ArcLen_{skpl175} = 230.354\ ft$

$Width_{walkway175} := 4ft$

$Wt_{walkangle175} := 8.5 \frac{lbf}{ft}$ Weight of walkway support angle L 3 1/2 X 3 1/2 X 3/8

$Wt_{grating} := 7.8psf$ Weight of aluminum 1 1/4x 3/16 grating

$Wt_{handpipe} := 2.72 \frac{lbf}{ft}$ Weight of handrail 2" Std Aluminum pipe

$Length_{handrail175} := 4 \cdot Length_{walkway175} = 921.415\ ft$

$Height_{post} := 3.5ft$

$$No_{posts175} := \text{round}\left(\frac{Length_{handrail175}}{5ft \cdot 2}\right) = 92$$

$$Wt_{walkway} := No_{posts175} \cdot Height_{post} \cdot Wt_{handpipe} + Length_{handrail175} \cdot Wt_{handpipe} \cdots = 14.485\,kip$$
$$+ Width_{walkway175} \cdot Length_{walkway175} \cdot Wt_{grating} \cdots$$
$$+ 2Wt_{walkangle175} \cdot Length_{walkway175}$$

I. FENDER SYSTEM

$L_{fender175} := 71.5ft$ — *Length of fender system*

$No_{vertfender175} := 13$ — *Number of vertical fender supports*

$Wt_{vertfender175} := 77 \frac{lbf}{ft}$ — *Weight of vertical fender support member W10X77*

$No_{horfender175} := 2$ — *Number of horizontal fender supports*

$Wt_{horzfender175} := 146 \frac{lbf}{ft}$ — *Weight of horz fender support member W27x146*

$El_{topfender175} := TOW_{175} - 1 = 15$ — *Elevation of top of fender*

$El_{botfender175} := -0.5$ — *Elevation of bottom of fender*

$$No_{comptimbers175} := \frac{\left(El_{topfender175} - El_{botfender175}\right) \cdot ft}{2ft} = 7.75$$

$Wt_{comtimbers} := 28 \frac{lbf}{ft}$ — Weight of composite fender 8"x12"

$$Wt_{totvertfender175} := Wt_{vertfender175} \cdot No_{vertfender175} \cdot \left(El_{topfender175} - El_{botfender175}\right) \cdot ft = 15.515\,kip$$

$$Wt_{tothorzfender175} := Wt_{horzfender175} \cdot No_{horfender175} \cdot L_{fender175} = 20.878\,kip$$

$$Wt_{tottimber175} := No_{comptimbers175} \cdot L_{fender175} \cdot Wt_{comtimbers} = 15.515\,kip$$

$$Wt_{fender} := Wt_{totvertfender175} + Wt_{tothorzfender175} + Wt_{tottimber175} = 51.909\,kip$$

$Wt_{totskpl} + Wt_{int} + Wt_{members} + Wt_{walkway} + Wt_{fender} = 358.875$ kip

This is per leaf

MAJOR HINGE COMPONENTS QUANTITIES

$\gamma_s := 495pcf$ unit weight of rolled steel

$\gamma_{cs} := 490pcf$ unit weight of cast steel

$\gamma_b := 509pcf$ unit weight of bronze

Hinge Pin:

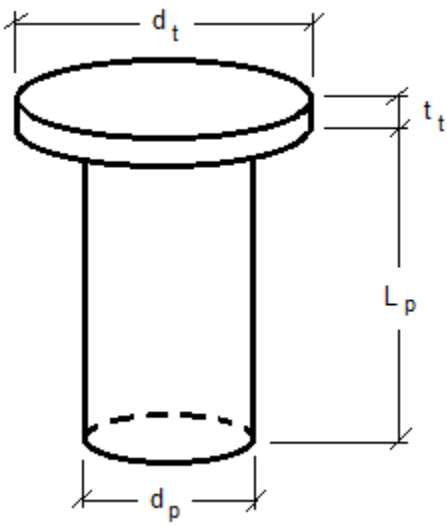

d_t = diameter of top

$d_t := 19in$

t_t = thickness of top

$t_t := 1in$

$d_p := 16in$

d_p = diameter of pin

$L_p := 31in$

L_p = lenght of pin

$A_p := \frac{(d_p)^2}{4} \cdot \pi = 201.1 \cdot in^2$ area of pin

$A_t := \frac{(d_t)^2}{4} \cdot \pi = 283.5 \cdot in^2$ area of top plate

$V_{hp} := A_p \cdot L_p + A_t \cdot t_t = 6516.4 \cdot in^3$ total volume of steel

$W_{hp} := V_{hp} \cdot \gamma_{cs} = 1847.8\,lbf$ total weight of hinge pin

Hinge Ball:

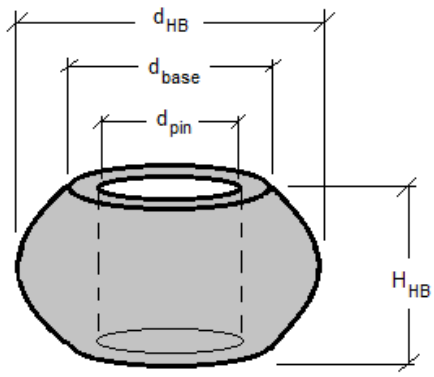

d_{HB} = diameter of hinge ball $\quad d_{HB} := 36in$

d_{base} = diameter of ball base $\quad d_{base} := 26.83\,in$

d_{pin} = diameter of pin (cut out section)

H_{HB} = height of hinge ball

$H_{HB} := 24in$

$$V_{sph} := \frac{4}{3}\cdot\pi\cdot\frac{(d_{HB})^3}{8} = 24429.0\cdot in^3$$ volume of solid sphere

$$h := \frac{1}{2}(d_{HB} - H_{HB}) = 6.0\,in$$ height of cut away section

$$V_{cut} := \frac{1}{3}\cdot\pi\cdot h^2\cdot\left(3\cdot\frac{d_{HB}}{2} - h\right) = 1809.6\cdot in^3$$ volume of sphere cut away (2 total)

$$V_{pin} := \frac{(d_p)^2}{4}\cdot\pi\cdot H_{HB} = 4825.5\cdot in^3$$ volume removed for pin

$$V_{HB} := V_{sph} - 2\cdot V_{cut} - V_{pin} = 15984.4\cdot in^3$$ total volume of hinge ball

$$W_{HB} := V_{HB}\cdot\gamma_{cs} = 4.5\cdot kip$$ total weight of hinge ball

Hinge Bushing:

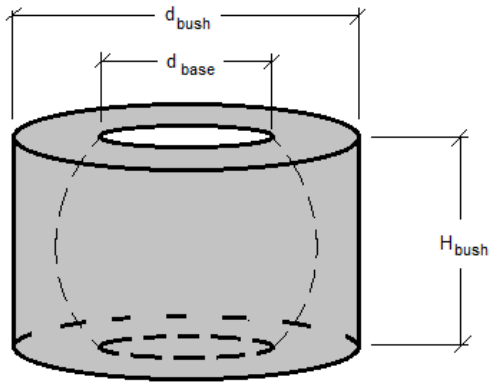

d_{bush} = diameter of bushing

$d_{bush} := 44in$

H_{bush} = height of bushing

$H_{bush} := 26in$

d_{base} = diameter of ball base

$$V_{cyl} := \frac{(d_{bush})^2}{4} \cdot \pi \cdot H_{bush} = 39533.8 \cdot in^3$$ volume of solid cylinder

$$V_{sph} := \frac{4}{3} \cdot \pi \cdot \frac{(d_{HB})^3}{8} = 24429.0 \cdot in^3$$ volume of solid sphere

$$h := \frac{1}{2}(d_{HB} - H_{bush}) = 5.0\,in$$ height of cut away section

$$V_{cut} := \frac{1}{3} \cdot \pi \cdot h^2 \cdot \left(3 \cdot \frac{d_{HB}}{2} - h\right) = 1282.8 \cdot in^3$$ volume of sphere cut away (2 total)

$$V_{void} := V_{sph} - 2 \cdot V_{cut} = 21863.4 \cdot in^3$$ volume of void for hinge ball

$$V_{bush} := V_{cyl} - V_{void} = 17670.4 \cdot in^3$$ total volume of hinge bushing

$$W_{HB} := V_{bush} \cdot \gamma_b = 5.2 \cdot kip$$ total weight of hinge bushing

Hinge Plates:

* Microstation was used in order to find the surface area of this complex shape.
See below for the model and the resulting surface areas for all sector gates.

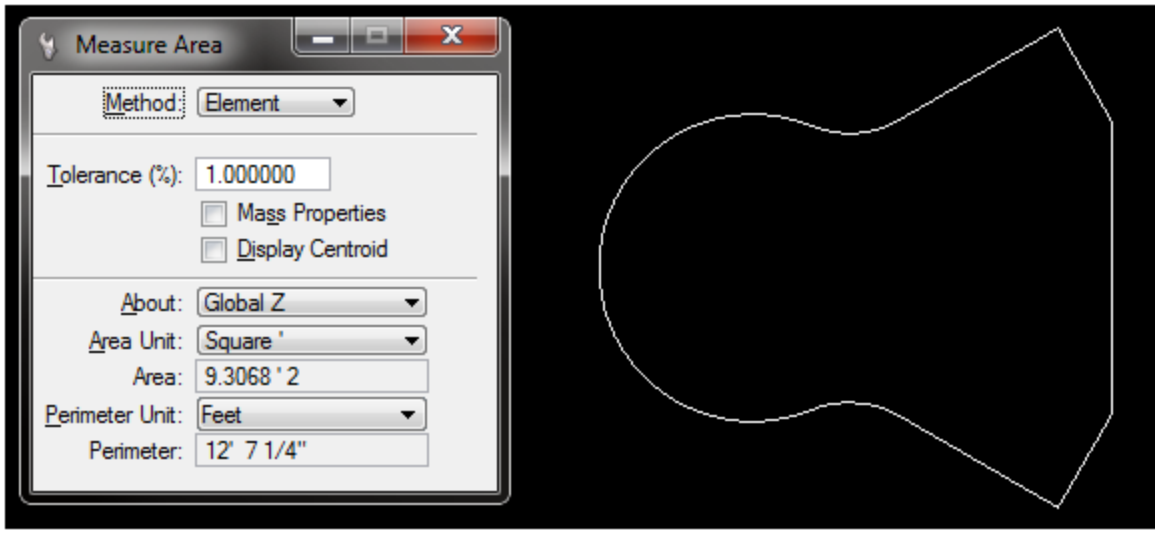

$A_{hpl} := 10259.29in^2$ area of hinge plate (shown in sketch)

$t_{hpl} := 2in$ thickness of hinge plate

$V_{hpl} := A_{hpl} \cdot t_{hpl} = 20518.6 \cdot in^3$ volume of hinge plate

$W_{hpl} := 2V_{hpl} \cdot \gamma_s = 11.8 \cdot kip$ weight of hinge plates (2 total)

Hinge Base Casting:

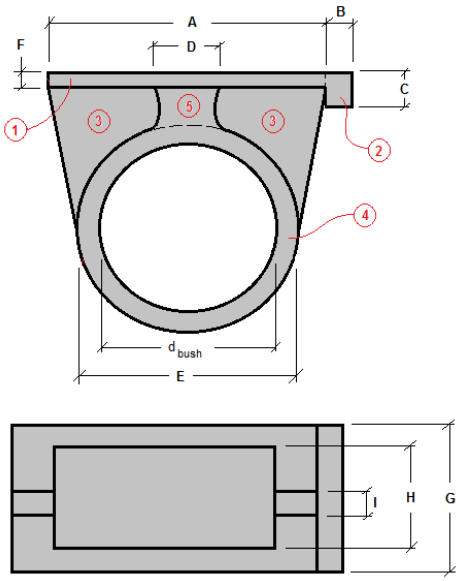

$A_1 := 72in$

$B_1 := 6in$

$C_1 := 6in$

$D_1 := 10in$

$E_1 := 50in$

$F_1 := 3in$

$G_1 := 46in$

$H_1 := 26in$

$I_1 := 3in$

Section 1 - Plate

$V_{pl} := A_1 \cdot F_1 \cdot G_1 = 9936.0 \cdot in^3$ volume of plate

Section 2 - Alignment Plate

$V_{apl} := B_1 \cdot C_1 \cdot G_1 = 1656.0 \cdot in^3$ volume of alignment plate

Section 3 - Stiffeners

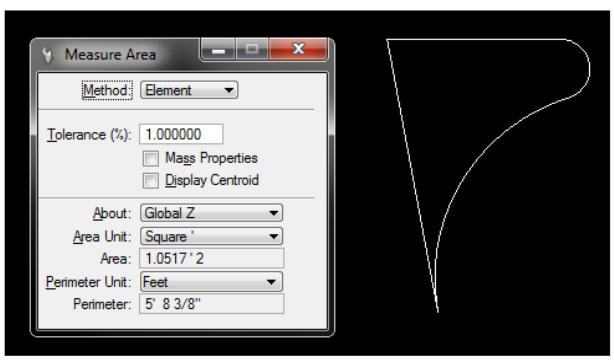

* Microstation was used in order to find the surface area of this complex shape. See below for the model and the resulting surface areas for all sector gates.

$A_{stiff_1} := 971.34in^2$ area of stiffeners (shown in sketch)

$V_{stiff_1} := A_{stiff_1} \cdot I_1 = 2914.0 \cdot in^3$ volume of stiffeners

Section 4 - Hoop

$$A_{hoop} := \frac{(E_1)^2}{4} \cdot \pi = 1963.5 \cdot in^2$$ area of the solid hoop

$$A_{bush} := \frac{(d_{bush})^2}{4} \cdot \pi = 1520.5 \cdot in^2$$ area cut out due to bushing

$$V_{hoop} := (A_{hoop} - A_{bush}) \cdot H_1 = 11517.1 \cdot in^3$$ volume of hoop

Section 5 - Hoop Support

* Microstation was used in order to find the surface area of this complex shape.
See below for the model and the resulting surface area for the example gate.

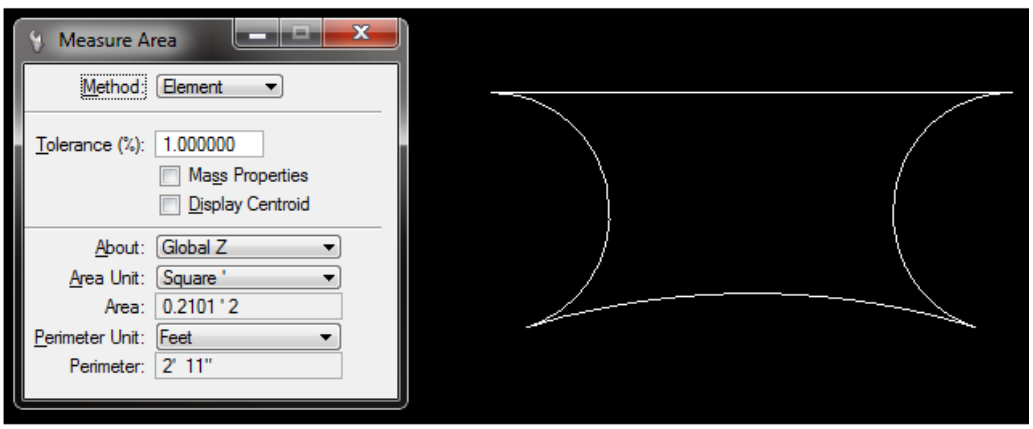

* Microstation drawing showing surface area of one stiffener.

$$A_{sup_1} := 67.75 in^2$$ area of the support (shown in sketch)

$$V_{sup_1} := A_{sup_1} \cdot H_1 = 1761.5 \cdot in^3$$ volume of support

Total Section

$$V_{tot} := V_{pl} + V_{apl} + V_{stiff_1} + V_{hoop} + V_{sup_1} = 27784.6 \cdot in^3$$ total volume

$$W_{tot} := V_{tot} \cdot \gamma_{cs} = 7.9 \cdot kip$$ total weight

Hinge Anchor Plate:

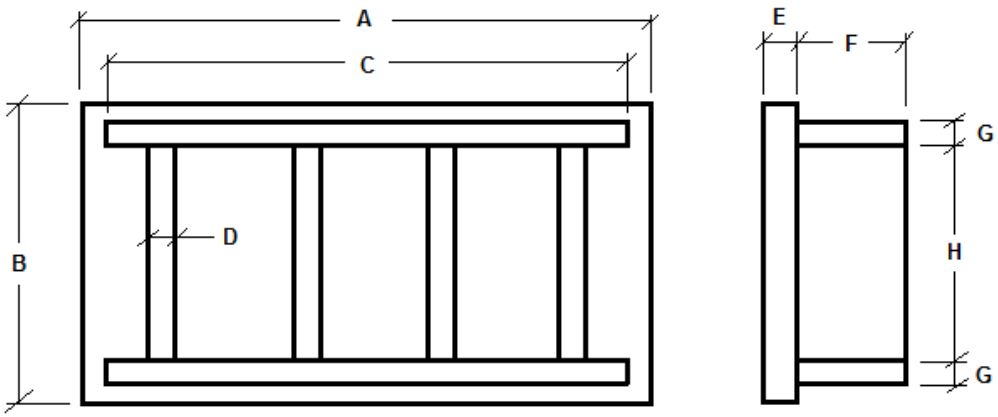

$A_2 := 80in$

$B_2 := 52in$

$C_2 := 78in$

$D_2 := 2in$

$E_2 := 4in$

$F_2 := 10in$

$G_2 := 2in$

$H_2 := 46.75in$

Back Plate

$V_{bp} := A_2 \cdot B_2 \cdot E_2 = 16640.0 \cdot in^3$ volume of backing plate

Horizontal Stiffener Plates

$V_{hsp} := 2(C_2 \cdot F_2 \cdot G_2) = 3120.0 \cdot in^3$ volume of horizontal stiffeners

Vertical Stiffeners

$V_{vsp} := 4(F_2 \cdot H_2 \cdot D_2) = 3740.0 \cdot in^3$ volume of vertical stiffeners

Total Section

$V_{tot} := V_{bp} + V_{hsp} + V_{vsp} = 23500.0 \cdot in^3$ total volume of anchor plate

$W_{tot} := V_{tot} \cdot \gamma_s = 6731.8\ lbf$ total weight of anchor plate

Hinge Mounting Plate:

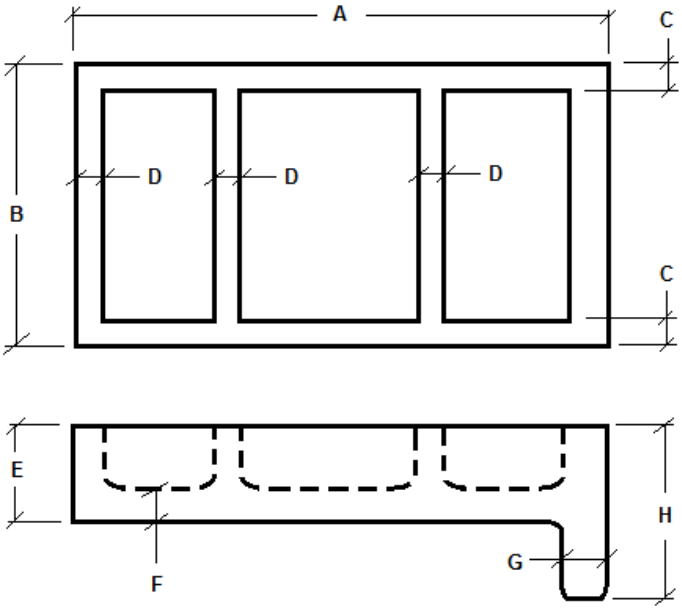

$A_3 := 80in$

$B_3 := 52in$

$C_3 := 3in$

$D_3 := 3in$

$E_3 := 10in$

$F_3 := 4in$

$G_3 := 4in$

$H_3 := 10in$

Back Plate

$V_{bp} := (A_3 - G_3) \cdot B_3 \cdot F_3 = 15808.0 \cdot in^3$ volume of backing plate

Top and Bottom Plates

$V_{tbp} := 2(A_3 - G_3) \cdot C_3 \cdot (E_3 - F_3) = 2736.0 \cdot in^3$ volume of plate along top and bottom

Vertical Stiffeners

$V_{vsp} := 3(B_3 - 2 \cdot C_3) \cdot D_3 \cdot (E_3 - F_3) = 2484.0 \cdot in^3$ volume of vertical stiffeners

Alignment Plate

$V_{ap} := B_3 \cdot G_3 \cdot H_3 = 2080.0 \cdot in^3$ volume of vertical stiffeners

Total Section

$V_{tot} := V_{bp} + V_{tbp} + V_{vsp} + V_{ap} = 23108.0 \cdot in^3$ total volume of anchor plate

$W_{tot} := V_{tot} \cdot \gamma_s = 6619.5\ lbf$ total weight of anchor plate

Hinge Casting:

* The hinge casting is a complex shape with several voids and difficult geometry. Solid Works was used to model the hinge casting for a 56' Sector Gate for the Morganza to rthe Gulf Study. With this modeled, the hinge casting weight of the 125' sector gate for this study was calculated.

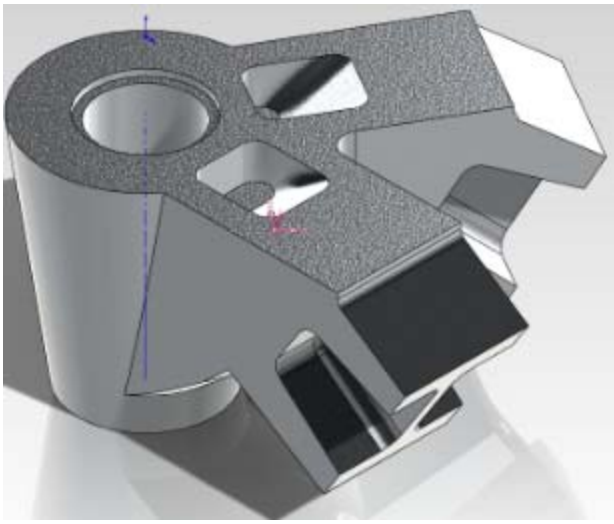

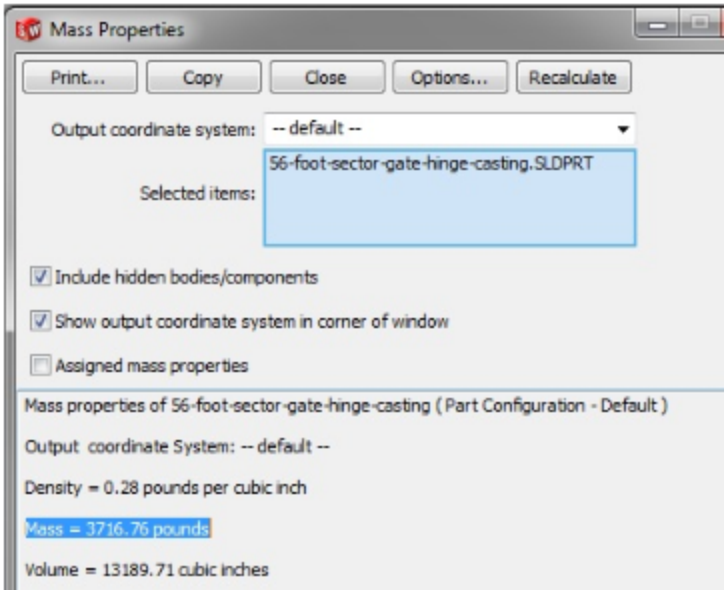

Pro-Rated Weight of Hinge Casting

$Weight_{hcast} := 19800lb$

Pintle Ball/Shaft:

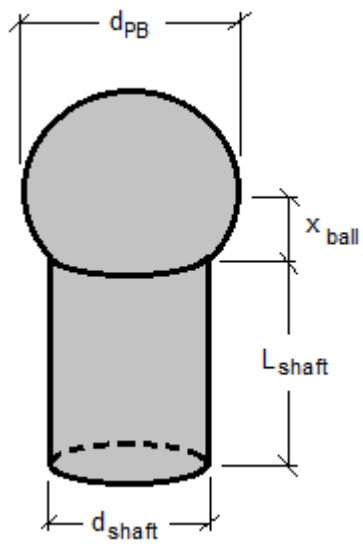

d_{shaft} = diameter of the pintle shaft

$d_{shaft} := 24in$

L_{shaft} = length of the pintle shaft

$L_{shaft} := 41in$

d_{PB} = diameter of pintle ball

$d_{PB} := 42in$

x_{ball} = distance from center of ball to top edge of shaft

$x_{ball} := 17.25in$

$V_{sph} := \frac{4}{3} \cdot \pi \cdot \frac{(d_{PB})^3}{8} = 38792.4 \cdot in^3$ volume of solid sphere

$h := \left(\frac{d_{PB}}{2} - x_{ball}\right) = 3.8\,in$ height of sphere cut away section

$V_{cut} := \frac{1}{3} \cdot \pi \cdot h^2 \cdot \left(3 \cdot \frac{d_{PB}}{2} - h\right) = 872.5 \cdot in^3$ volume of sphere cut away

$V_{shaft} := \frac{(d_{shaft})^2}{4} \cdot \pi \cdot L_{shaft} = 18548.0 \cdot in^3$ volume of cylinder

$V_{PB} := V_{sph} - V_{cut} + V_{shaft} = 56467.8 \cdot in^3$ total volume of pintle ball

$W_{PB} := V_{PB} \cdot \gamma_{cs} = 16012.3\,lbf$ total weight of pintle ball

Pintle Bushing:

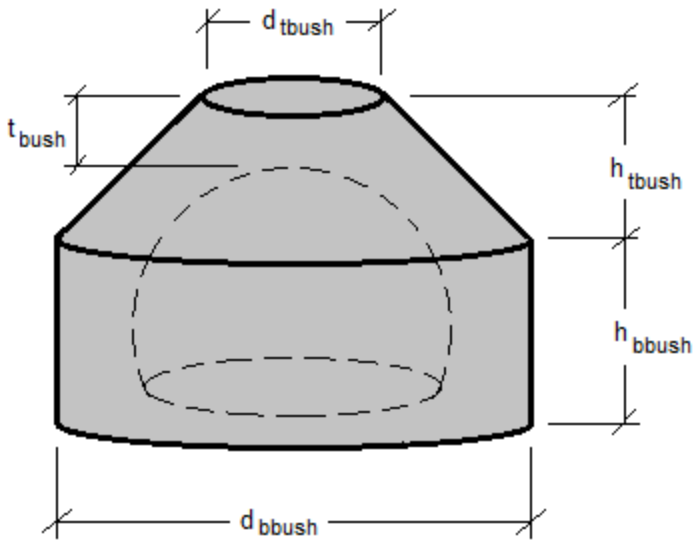

d_{tbush} = diameter of the bushing top

$d_{tbush} := 20.75\,in$

h_{tbush} = height of bushing top

$h_{tbush} := 14.63\,in$

d_{bbush} = diameter of the bushing base

$d_{bbush} := 50\,in$

h_{bbush} = height of bushing base

$h_{bbush} := 27.50\,in$

t_{bush} = thickness of bushing between pintle ball and bushing top

$t_{bush} := 4\,in$

$$V_{tcone} := \frac{1}{12}\cdot\pi\cdot\left[\left(d_{tbush}\right)^2 \cdots + \left[d_{bbush}\cdot d_{tbush} \cdots + \left(d_{bbush}\right)^2\right]\right]\cdot h_{tbush} = 15198.2\cdot in^3$$ volume of truncated cone

$$V_{cyl} := \frac{\left(d_{bbush}\right)^2}{4}\cdot\pi\cdot h_{bbush} = 53996.1\cdot in^3$$ volume of cylinder

$$V_{sph} := \frac{4}{3}\cdot\pi\cdot\frac{\left(d_{PB}\right)^3}{8} = 38792.4\cdot in^3$$ volume of sphere

$$h := \left(d_{PB} + t_{bush} - h_{tbush} - h_{bbush}\right) = 3.9\,in$$ height of sphere cut away section

$$V_{cut} := \frac{1}{3}\cdot\pi\cdot h^2\cdot\left(3\cdot\frac{d_{PB}}{2} - h\right) = 927.4\cdot in^3$$ volume of sphere cut away

$$V_{pbush} := V_{tcone} + V_{cyl} - \left(V_{sph} - V_{cut}\right) = 31329.3\cdot in^3$$ total volume of pintle bushing

$$W_{pbush} := V_{pbush}\cdot\gamma_b = 9228.4\,lbf$$ total weight of pintle bushing

Pintle Support Assembly:

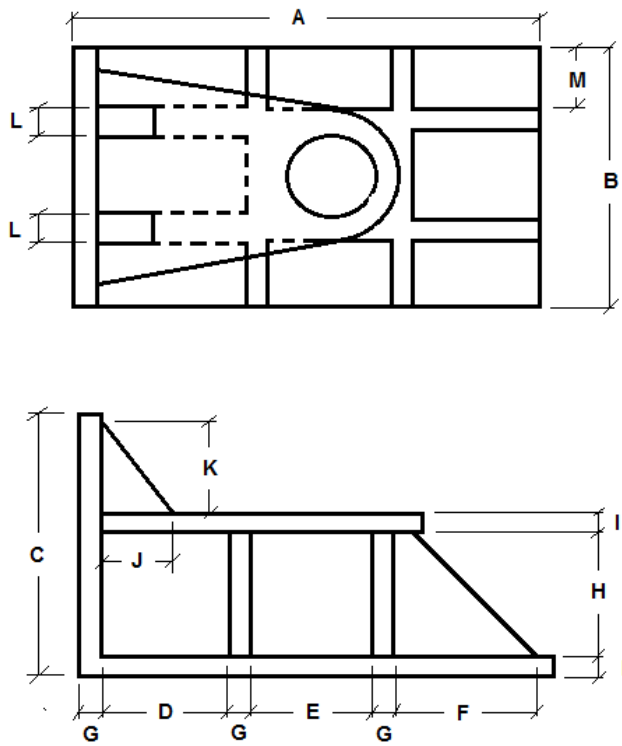

$A_4 := 84in$

$B_4 := 66in$

$C_4 := 54in$

$D_4 := 21in$

$E_4 := 30in$

$F_4 := 21in$

$G_4 := 4in$

$H_4 := 28in$

$I_4 := 4in$

$J_4 := 19in$

$K_4 := 22in$

$L_4 := 5in$

$M_4 := 15in$

Base Plate

$$V_{bpl} := A_4 \cdot B_4 \cdot I_4 = 22176.0 \cdot in^3$$ volume of base plate

Bearing Plate

$$V_{brpl} := (C_4 - I_4) \cdot B_4 \cdot G_4 = 13200.0 \cdot in^3$$ volume of bearing plate

Side Stiffeners

$$V_{ss} := (4) \cdot \left(\frac{1}{2}\right) \cdot H_4 \cdot M_4 \cdot G_4 = 3360.0 \cdot in^3$$ volume of side stiffeners (4 total)

Front Stiffeners

$$V_{fs} := (2)\left(\frac{1}{2}\right) \cdot F_4 \cdot H_4 \cdot G_4 = 2352.0 \cdot in^3$$ volume of front stiffeners (2 total)

Rear Stiffeners

$$V_{rss} := (2) \cdot D_4 \cdot H_4 \cdot L_4 = 5880.0 \cdot in^3$$ volume of rear square stiffeners (2 total)

$$V_{rts} := (2) \cdot \left(\frac{1}{2}\right) \cdot J_4 \cdot K_4 \cdot L_4 = 2090.0 \cdot in^3$$ volume of rear triangular stiffeners (2 total)

Center Block

$$V_{cb} := (E_4 + 2 \cdot G_4) \cdot (B_4 - 2 \cdot M_4) \cdot H_4 = 38304.0 \cdot in^3$$

volume of center block (area pintle shaft fits into)

Top Plate

* Microstation was used in order to find the surface area of this complex shape.
See below for the model and the resulting surface area for the example gate.

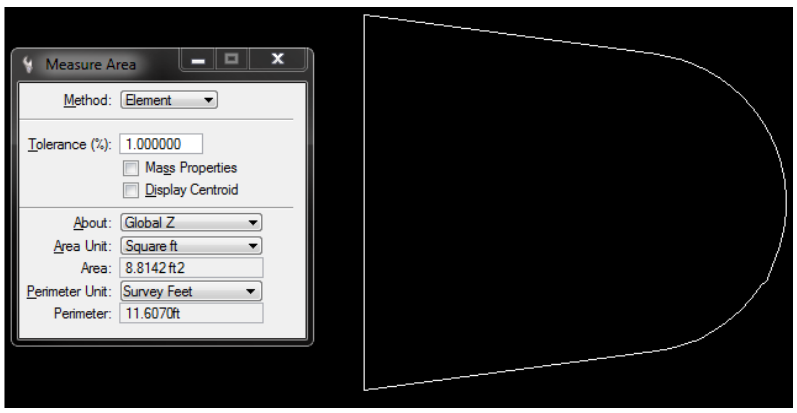

* Microstation drawing showing surface area of top plate.

$$A_{tp} := 2958 in^2$$

area of top plate (shown in sketch)

$$V_{tp} := A_{tp} \cdot I_4 = 11832.0 \cdot in^3$$

volume of top plate

Pintle Shaft Cut-Out

$$V_{void} := \frac{(d_{shaft})^2}{4} \cdot \pi \cdot (H_4 + I_4) = 14476.5 \cdot in^3$$

volume cut out for pintle shaft

Total Section

$$V_{tot} := V_{bpl} + V_{brpl} + V_{ss} + V_{fs} + V_{rss} \ldots + (V_{rts} + V_{cb} + V_{tp} - V_{void}) = 84717.5 \cdot in^3$$

total volume of anchor plate

$$W_{tot} := V_{tot} \cdot \gamma_s = 24268.0 \, lbf$$

total weight of anchor plate

Pintle Casting:

* The pintle casting is a complex shape with several voids and difficult geometry. Solid Works was used to model the pintle casting for the 56' Sector Gate - 35 year. With this modeled, the pintle casting weights of all the other sector gates was found by interpolating.

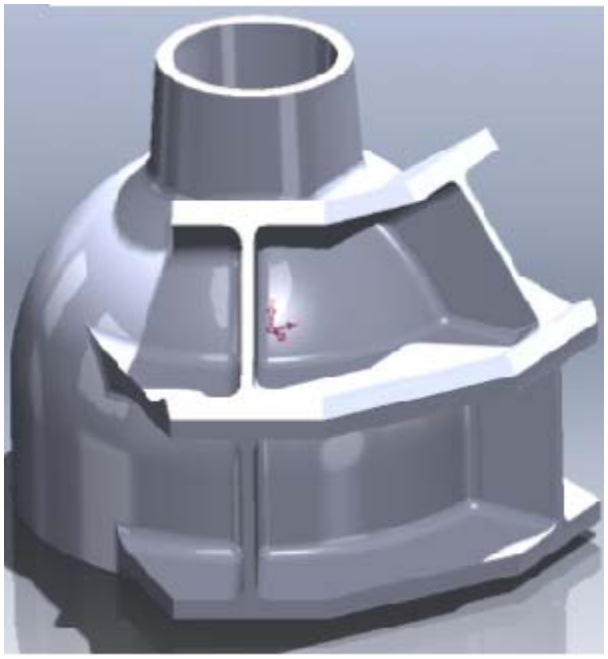

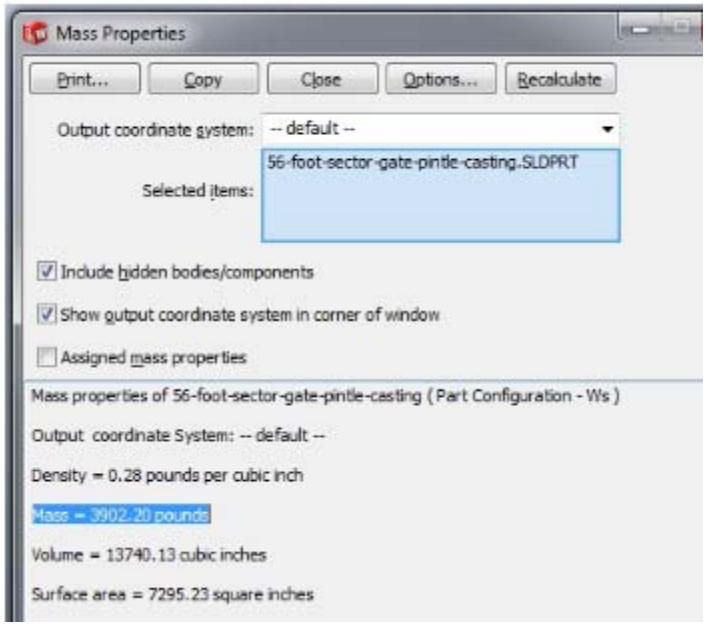

Pro-Rated Weight of Pintle Casting

$$Weight_{pcast} := 27631lb$$

125' SECTOR GATE NEEDLE GIRDER STORAGE RACK QUANTITY TAKEOFF

$W_{slab} := 71ft$ *Width of Slab*

$L_{slab} := 132ft$ *Length of Slab*

$T_{slab} := 8in$ *Thickness of Slab*

$W_{beam175} := 3.5ft$ *Width of Beams*

$T_{beam175} := 2.5ft$ *Thickness of Beams*

$L_{beam175} := 71ft$ *Length of Beams*

$No_{beams175} := 15$ *Number of Beams*

$Volume_{175plat} := W_{slab} \cdot L_{slab} \cdot T_{slab} + W_{beam175} \cdot T_{beam175} \cdot L_{beam175} \cdot No_{beams175} = 576.546 \cdot yd^3$

$No_{175piles} := 60$ *Number of 24" PPC Piles*

$L_{175piles} := 80ft$ *Length of 24" PPC Piles*

$Length_{175piles} := No_{175piles} \cdot L_{175piles} = 4.8 \times 10^3 ft$

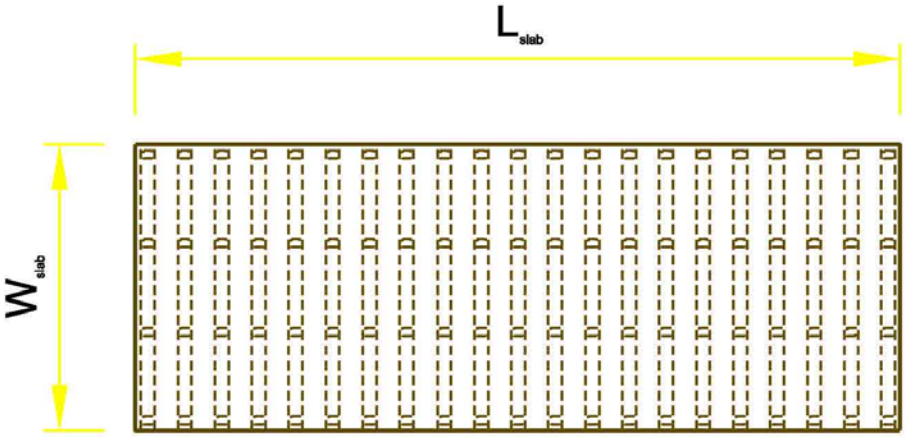

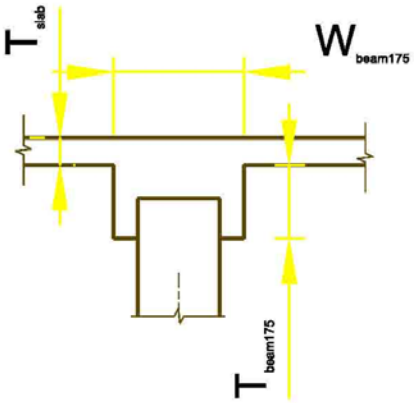

1.) 125' SECTOR GATE NEEDLES

$W_n := 12.4167ft$ *Width of Needle Panel*

$Top_n := 7.0ft$ *Top of Needle*

$Bot_n := -17.0ft$ *Bottom of Needle*

$Len_n := Top_n - Bot_n = 24\,ft$ *Length of Needle*

$\gamma_s := 490pcf$ *Unit Weight of Steel*

$t_{sp} := \frac{7}{16}in$ *Thickness of Skin Plate*

$Wt_{WT} := 38.5\frac{lbf}{ft}$ *Intercostal Weight - Use WT8X38.5*

$No_{int} := 7$ *Number of Intercostals per Needle*

$No_n := 20$ *Number of Needles Required for Gate*

$t_p := \frac{3}{8}in$ *Thickness of Diapragm Plate*

$W_p := 12in$ *Width of Diapragm Plate*

$L_p := 24in$ *Length of Diapragm Plate*

$No_p := 36$ *Number of Diapragm Plate*

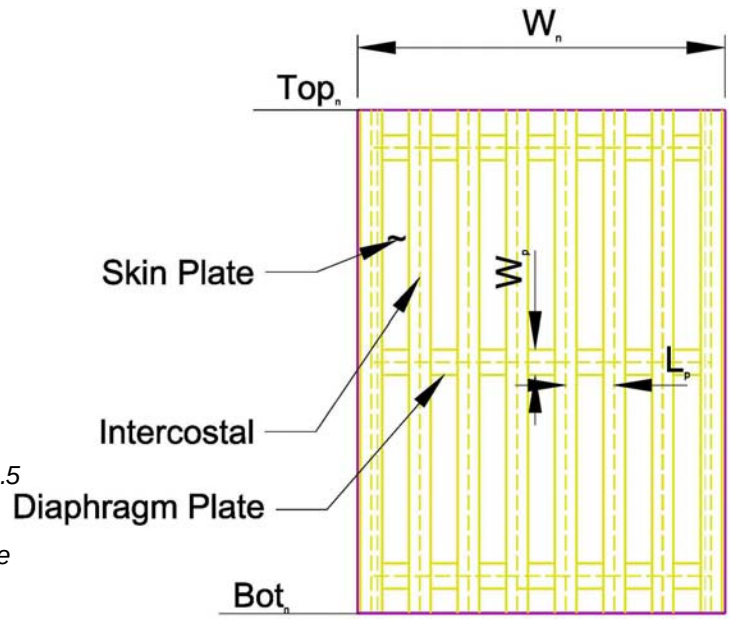

Intercostal Weight

$WT_{int} := Wt_{WT} \cdot No_{int} \cdot Len_n = 6.468\,kip$

Skin Plate Weight

$WT_{sp} := Len_n \cdot t_{sp} \cdot W_n \cdot \gamma_s = 5.324\,kip$

Diapragm Plate Weight

$WT_{dia} := L_p \cdot t_p \cdot W_p \cdot \gamma_s \cdot No_p = 1.102\,kip$

Total Weight of 1 Needle

$WT_n := WT_{int} + WT_{sp} + WT_{dia} = 12.894\ kip$

Total Weight of All Needles

$WT_{totn} := WT_n \cdot No_n = 257.883\ kip$

2.) 125' NEEDLE GIRDER

$t_{wm} := .75 \cdot in$ *Web Thickness at Mid-span*

$h_m := 96 \cdot in$ *Web Depth at Mid-span*

$b_{fm} := 20 \cdot in$ *Flange Width at Mid-span*

$t_{fm} := 2 \cdot in$ *Flange Thickness at Mid-span*

$A_{wm} := t_{wm} \cdot h_m = 72 \cdot in^2$ *Area of Web at Mid-span*

$A_{fm} := b_{fm} \cdot t_{fm} = 40 \cdot in^2$ *Area of Flange at Mid-span*

$Area_m := A_{wm} + (2 \cdot A_{fm}) = 152 \cdot in^2$ *Area of Girder at Mid-span*

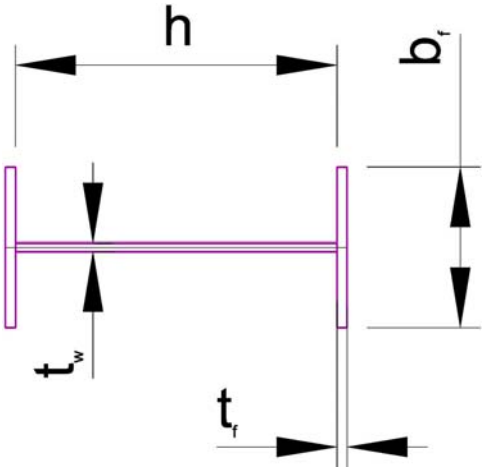

$t_{we} := .75 \cdot in$ *Web Thickness at End*

$h_e := 60 \cdot in$ *Web Depth at End*

$b_{fe} := 20 \cdot in$ *Flange Width at End*

$t_{fe} := 2 \cdot in$ *Flange Thickness at End*

$A_{we} := t_{we} \cdot h_e = 45 \cdot in^2$ *Area of Web at End*

$A_{fe} := b_{fe} \cdot t_{fe} = 40 \cdot in^2$ *Area of Flange at End*

$Area_e := A_{we} + (2 \cdot A_{fe}) = 125 \cdot in^2$ *Area of Girder at End*

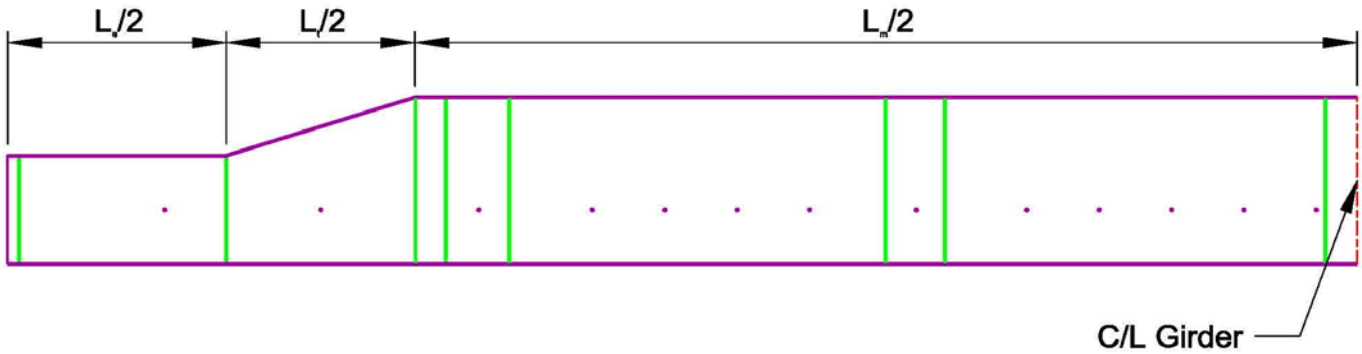

$L_e := 29ft$ *Length of End Section*

$L_t := 25ft$ *Length of Taper Section*

$L_m := 75ft$ *Length of Mid-span Section*

$No_{ng} := 2$ *Number of Needle Girder Required Per Gate*

$$WT_{ng} := \left[\left(Area_m \cdot L_m\right) + \left(Area_e \cdot L_e\right) + \left(\frac{Area_e + Area_m}{2} \cdot L_t\right)\right] \cdot \gamma_s = 62.909\,kip$$

$WT_{totng} := WT_{ng} \cdot No_{ng} = 125.818\,kip$

3.) 125' NEEDLE GIRDER SUPPORT TOWERS

$WT_{tower} := 6252kip$ *Weight of Needle Girder Tower from STAAD*

$No_{tower} := 6$ *Number of Needle Girder Towers Required Per Gate*

$WT_{tottower} := WT_{tower} \cdot No_{tower} = 3.751 \times 10^4\,kip$

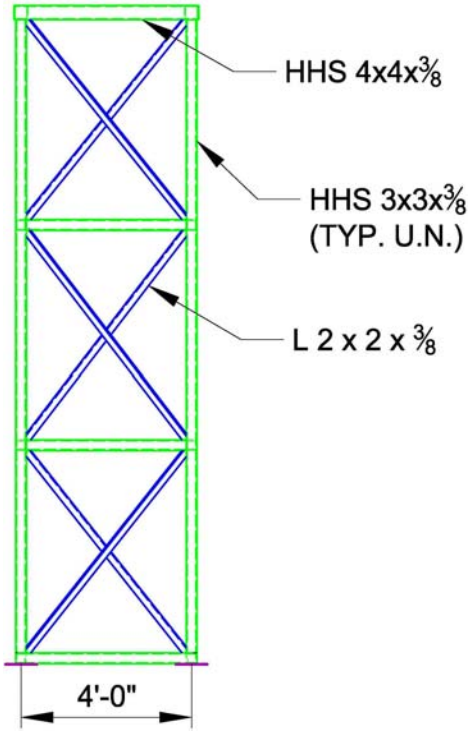

Sections Correspond to Original Drawings
Demolition of Vertical Wall Section; slab to remain

Section A-A = 504 CY
Section B-B = 448 CY
Section C-C = 398 CY
Section D-D = 350 CY
Section E-E = 306 CY
Section F-F = 163 CY
Section G-G = 82 CY
2,251 CY for one wing

See Cadd Drawings

4 wings total (2,251 CY) = 9,004 CY

Main structure Vertical Walls

For TSP, only demolish 2 wings on the South side of East GIWW Gatebay

Sections correspond to Original Drawings

Section F-F Looking Behind

Areas done in Cadd

Volume = (619 Ft²)(18 Ft)/27 = 413 CY

Section F-F Looking Forward

Volume = (489 Ft²)(17 Ft)/27 = 308 CY

Section H-H

Volume = (389 Ft²)(58 Ft)/27 = 836 CY

Section G-G

Volume = (402 Ft²)(43.83 Ft)/27 = 653 CY

Section J-J & Section K-K

Average Section = 626 Ft² + 450 Ft² / 2 = 538 Ft²

Volume = (538 Ft²)(29.37 Ft)/27 = 585 CY

Sum of Volumes = 2,795 CY

For TSP, only demolish the South side of East GIWW Gatebay

4 Gate Monolith Section (2,795) = 11,180 CY

4 Sector Gates will also be removed

River Side Sheet Pile Approach Walls

West Side No drawings available

Google Earth Lengths = 55 + 60 + 140 + 58 + 57 + 56 + 68 ≈ 500 Ft

East Side

Google Earth Lengths = 36 + 50 + 46 + 58 + 58 + 63 + 56 + 42 + 40 + 56

≈ 500 Ft

Assume existing sheet pile length = 50 Ft

TOPS 35502

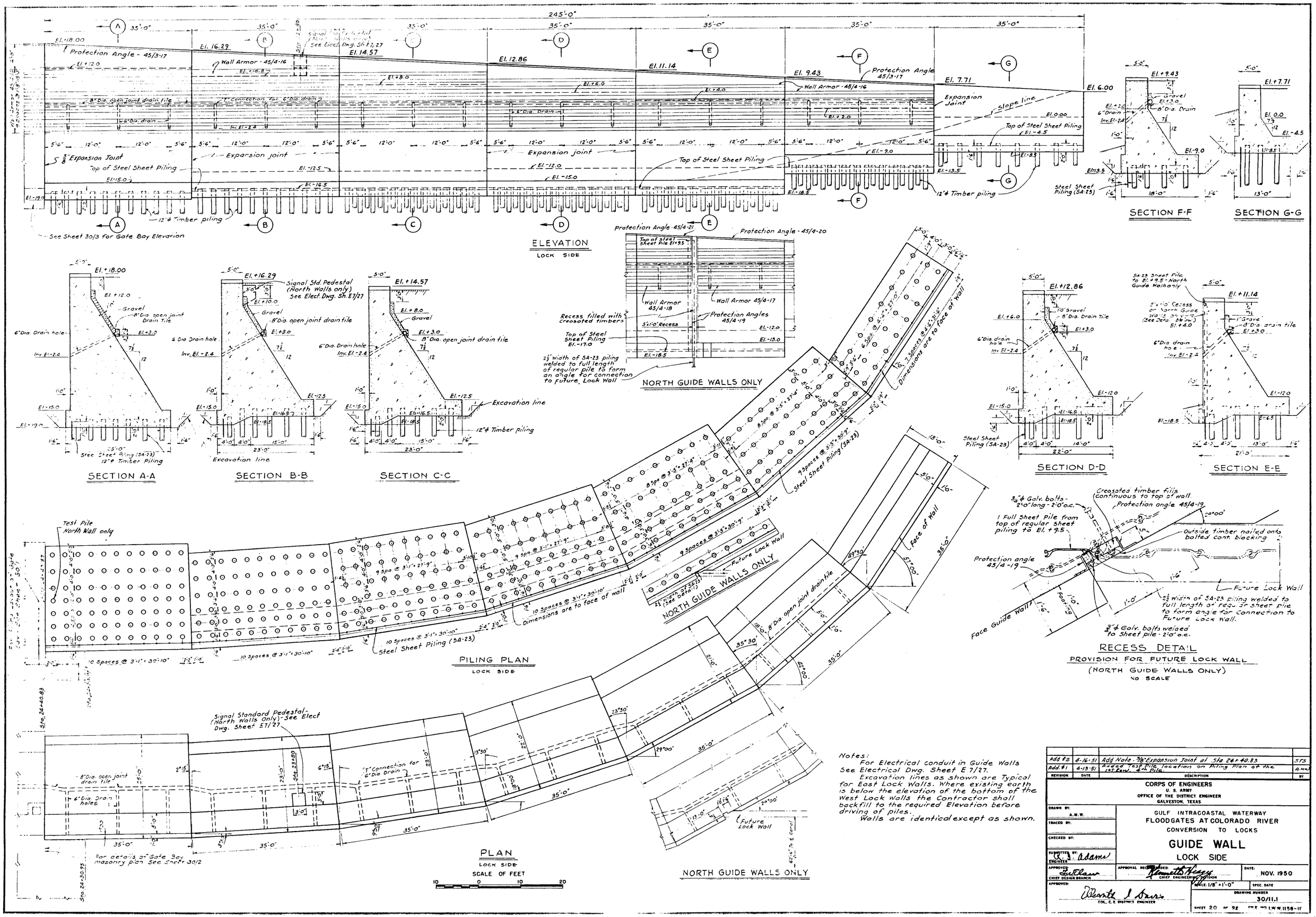

Notes:
For Electrical conduit in Guide Walls See Electrical Dwg. Sheet E 7/27.
Excavation lines as shown are Typical for East Lock Walls. Where existing earth is below the elevation of the bottom of the West Lock Walls the Contractor shall backfill to the required Elevation before driving of piles.
Walls are identical except as shown.

REVISION	DATE	DESCRIPTION	BY
Add #2	4-16-51	Add Note - 3/8" Expansion Joint at Sta 24+40.83	SFS
Add #1	4-13-51	Added Test Pile location on Piling Plan at the 1st Row, 4th Pile.	A.M.W.

CORPS OF ENGINEERS
U. S. ARMY
OFFICE OF THE DISTRICT ENGINEER
GALVESTON, TEXAS

GULF INTRACOASTAL WATERWAY
FLOODGATES AT COLORADO RIVER
CONVERSION TO LOCKS

GUIDE WALL
LOCK SIDE

DRAWN BY: A.M.W.
TRACED BY:
CHECKED BY:
SUBMITTED BY: R. J. Adams, ENGINEER
APPROVED: CHIEF DESIGN BRANCH
APPROVAL RECOMMENDED: CHIEF ENGINEERING DIVISION
APPROVED: COL. C. E. DISTRICT ENGINEER
DATE: NOV. 1950
SCALE: 1/8" = 1'-0"
SPEC. DATE
DRAWING NUMBER 30/11.1
SHEET 20 OF 92
FILE NO. I.W.W. 1158-11

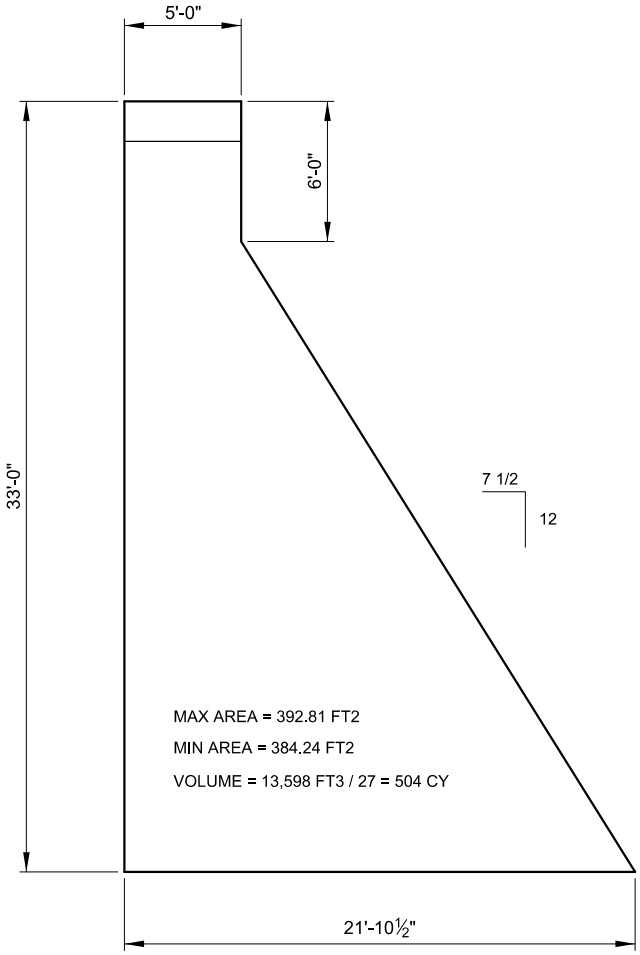

SECTION A-A

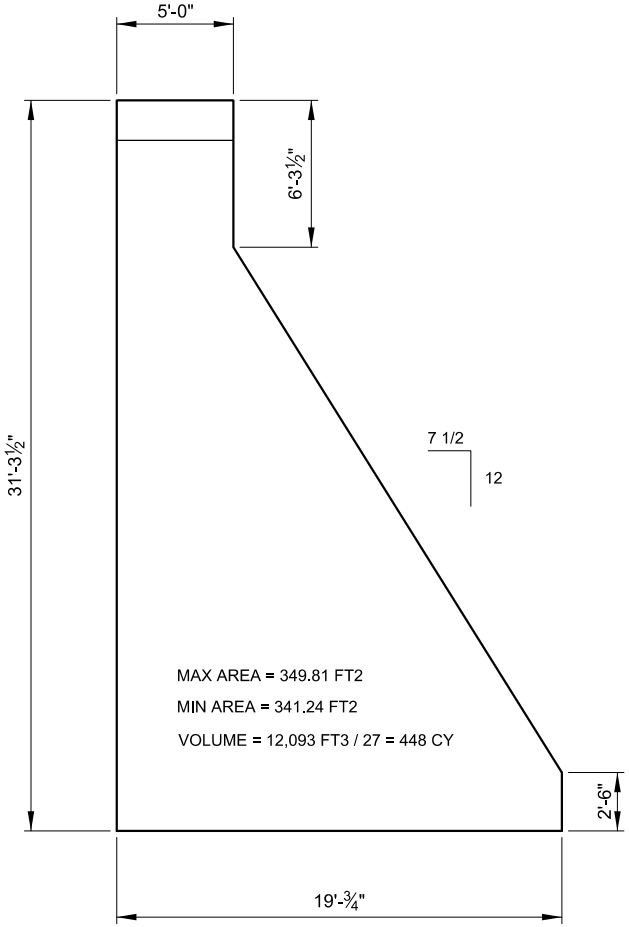

SECTION B-B

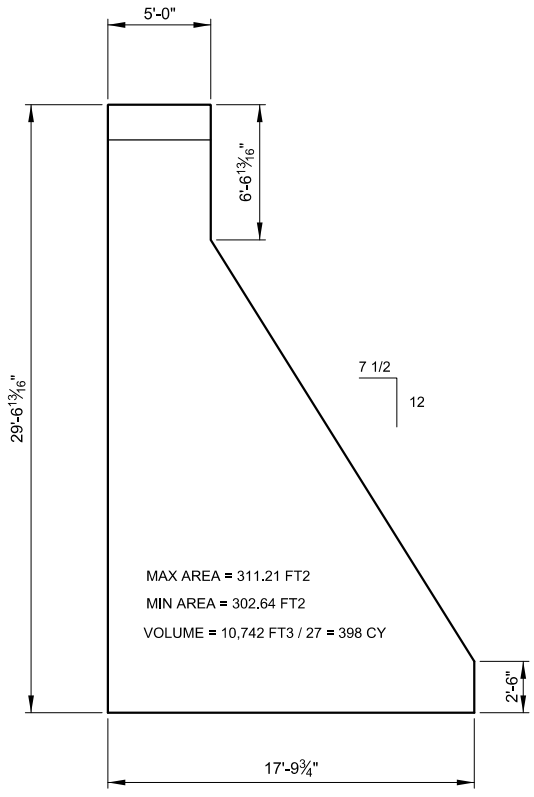

SECTION C-C

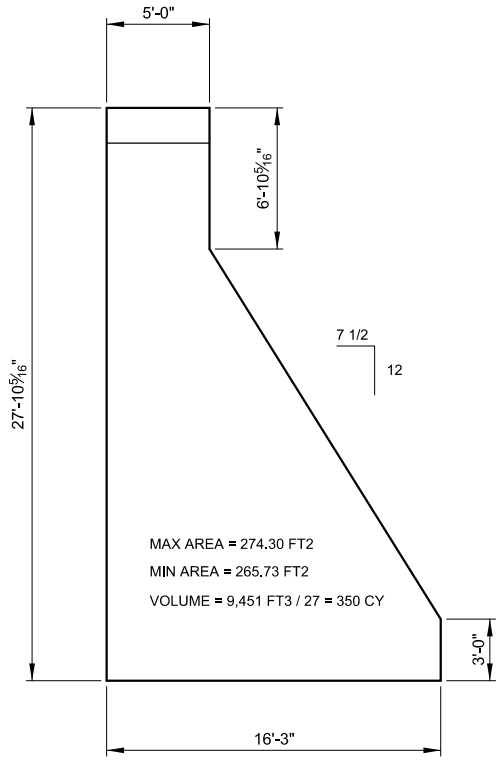

SECTION D-D

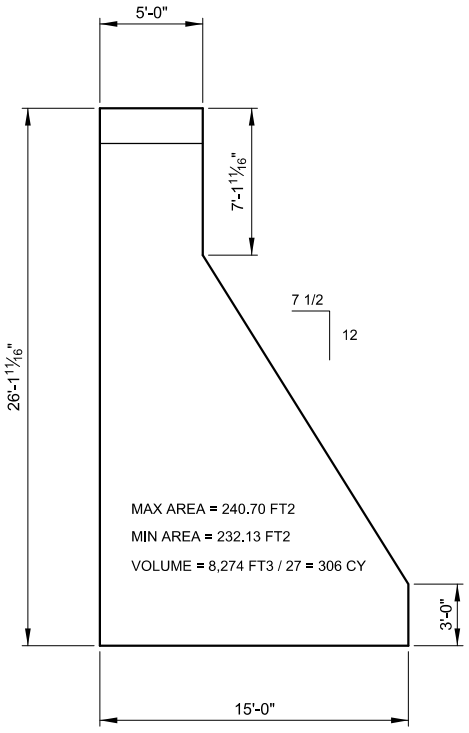

SECTION E-E

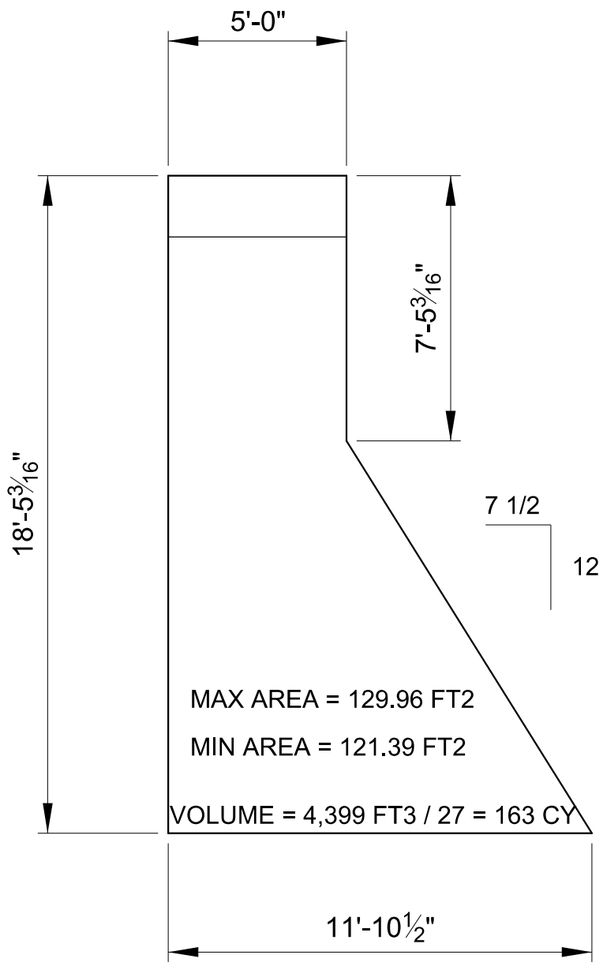

SECTION F-F

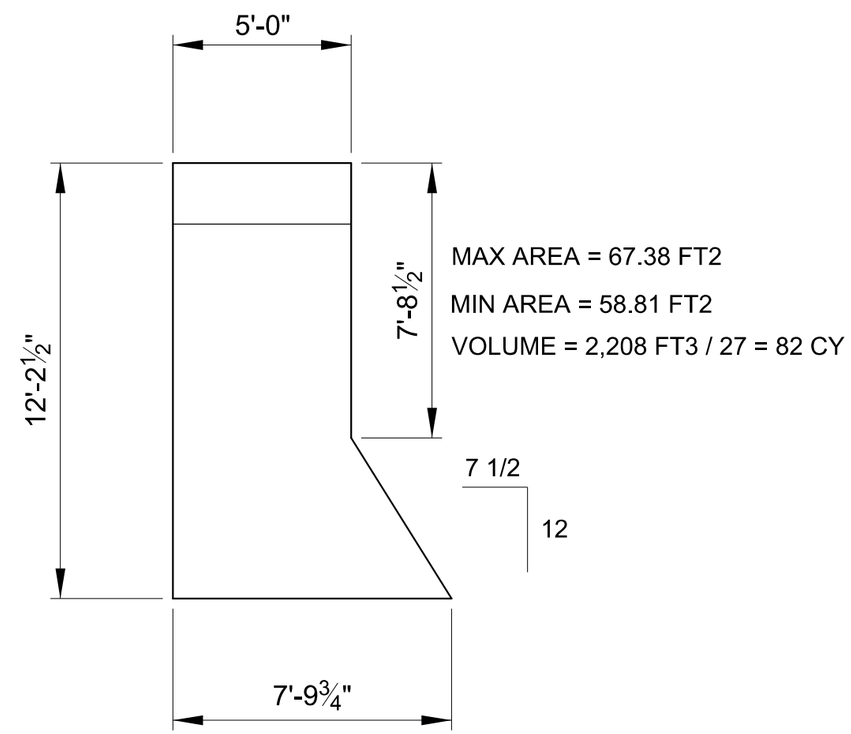

SECTION G-G

REFERENCES.

Piling plan, sheet	30/1
Masonry sections, sheet	30/3
Manholes "B" & "C", sheet	30/5
Reinforcement, sheets	30/8, 6 & 7
Hinge anchorage & seal beams, location plan, sheet	30/9
Machinery pit, sheet	30/4
Wall armor & protection angle location, sheet	30/10
Rubber seal strip, sheet	45/5
Light & signal standard recess, sheet	30/3
Crossover expansion joint, sheet	E 7/13
Control House, sheet	30/13

NOTE:

Paving slab to be poured in blocks of the size indicated and 2'-0" thick Each block to have one 6" diameter relief hole Relief holes to be filled with gravel

Excavation lines as shown are Typical for East Lock Walls. Where existing earth is below the Elevation of the bottom of the West Lock Walls the Contractor shall backfill to the required Elevation before driving of Piles.

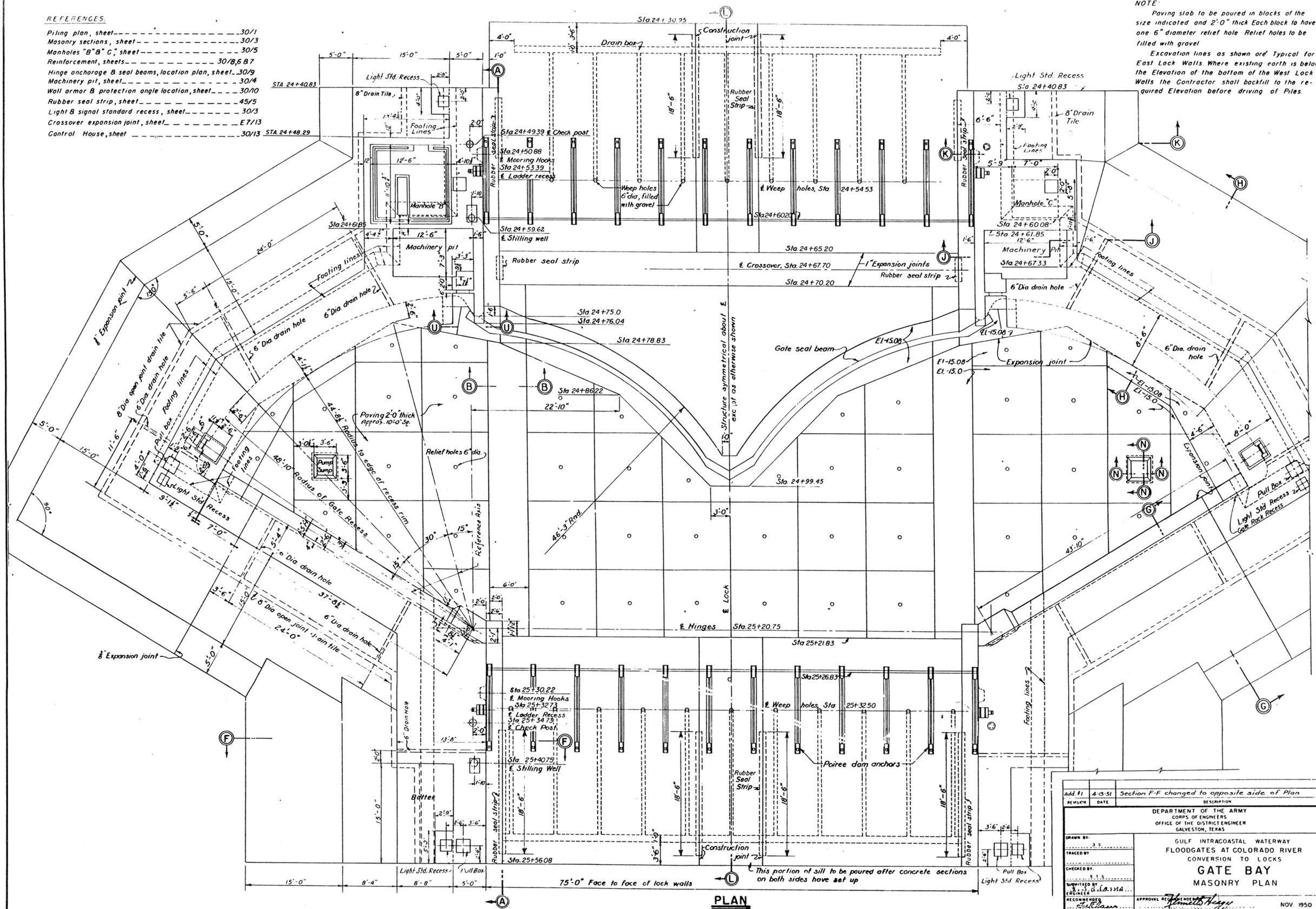

PLAN

SCALE 3/16 INCH = 1 FOOT

REVISION	DATE	DESCRIPTION	BY
Add. #1	4-13-51	Section F-F changed to opposite side of Plan	A.M.W.

DEPARTMENT OF THE ARMY
CORPS OF ENGINEERS
OFFICE OF THE DISTRICT ENGINEER
GALVESTON, TEXAS

GULF INTRACOASTAL WATERWAY
FLOODGATES AT COLORADO RIVER
CONVERSION TO LOCKS

GATE BAY
MASONRY PLAN

DRAWN BY: D.S.
TRACED BY:
CHECKED BY: S.T.S.
SUBMITTED BY: ENGINEER
RECOMMENDED: CHIEF, DESIGN BRANCH
APPROVAL RECOMMENDED: CHIEF, ENGINEERING DIVISION
APPROVED: COL., C.E., DISTRICT ENGINEER

NOV. 1950

SCALE AS SHOWN
SPEC DATE
DRAWING NUMBER 30/2
SHEET 11 OF 12

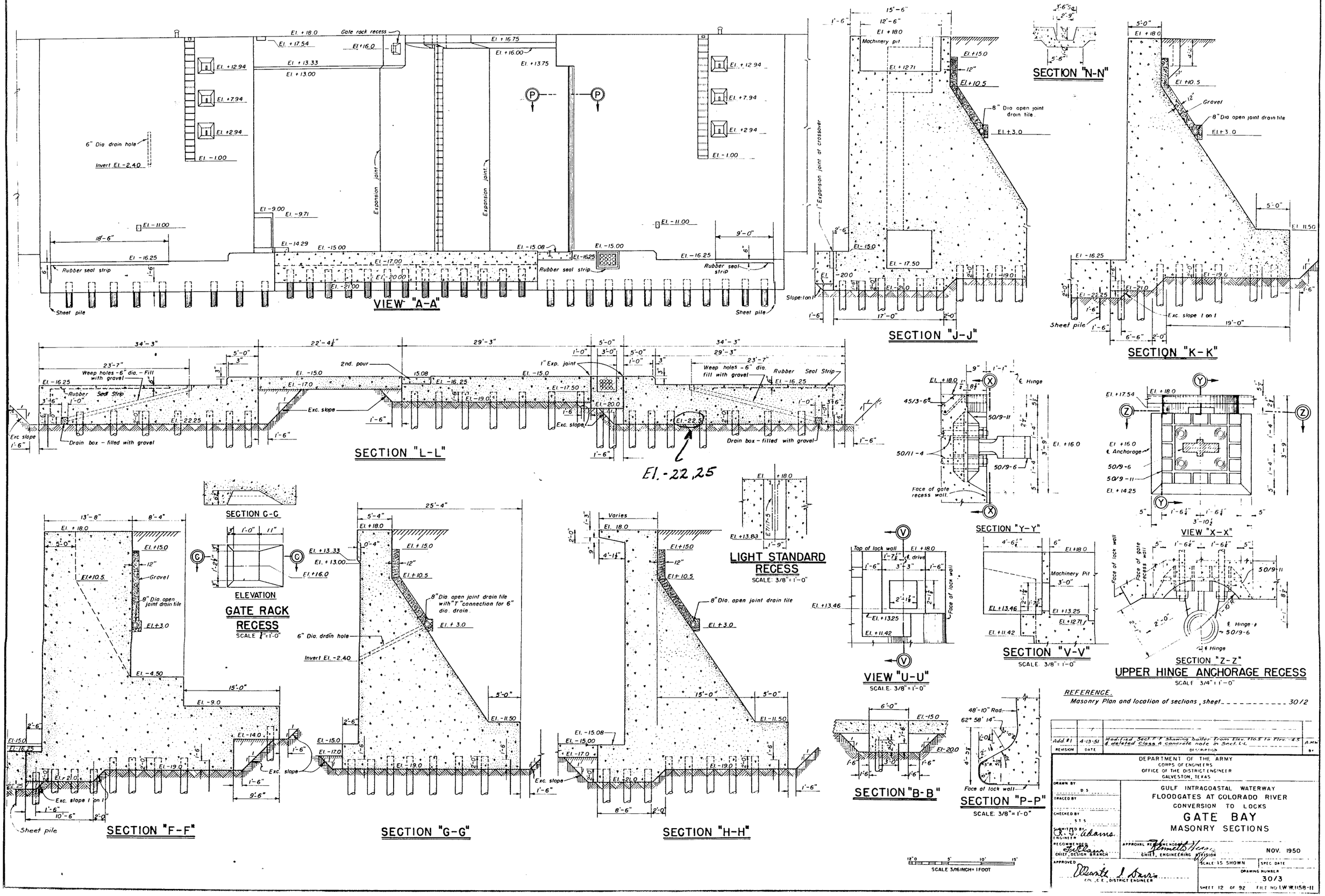
VIEW "A-A"
SECTION "J-J"
SECTION "N-N"
SECTION "K-K"
SECTION "L-L"
SECTION C-C
ELEVATION
GATE RACK RECESS
SCALE 1/4"=1'-0"
LIGHT STANDARD RECESS
SCALE: 3/8"=1'-0"
SECTION "Y-Y"
VIEW "X-X"
VIEW "U-U"
SCALE: 3/8"=1'-0"
SECTION "V-V"
SCALE: 3/8"=1'-0"
SECTION "Z-Z"
UPPER HINGE ANCHORAGE RECESS
SCALE 3/4"=1'-0"
SECTION "B-B"
SECTION "P-P"
SCALE: 3/8"=1'-0"
SECTION "F-F"
SECTION "G-G"
SECTION "H-H"
SCALE 3/16 INCH = 1 FOOT
REFERENCE:
Masonry Plan and location of sections, sheet 30/2
Add #1 4-13-51 Modified Sect F-F showing batter from Elev. +10.5 to Elev. -4.5 & deleted Class A concrete note in Sect. L-L A.M.K.
REVISION DATE DESCRIPTION BY
DEPARTMENT OF THE ARMY
CORPS OF ENGINEERS
OFFICE OF THE DISTRICT ENGINEER
GALVESTON, TEXAS
GULF INTRACOASTAL WATERWAY
FLOODGATES AT COLORADO RIVER
CONVERSION TO LOCKS
GATE BAY
MASONRY SECTIONS
DRAWN BY D.S.
TRACED BY
CHECKED BY S.T.S.
SUBMITTED BY
ENGINEER
RECOMMENDED
CHIEF, DESIGN BRANCH
APPROVED
CHIEF, ENGINEERING DIVISION
APPROVED
COL., C.E., DISTRICT ENGINEER
NOV. 1950
SCALE 3/8 SHOWN
SPEC DATE
DRAWING NUMBER 30/3
SHEET 12 OF 92
FILE NO. IWW 1158-11

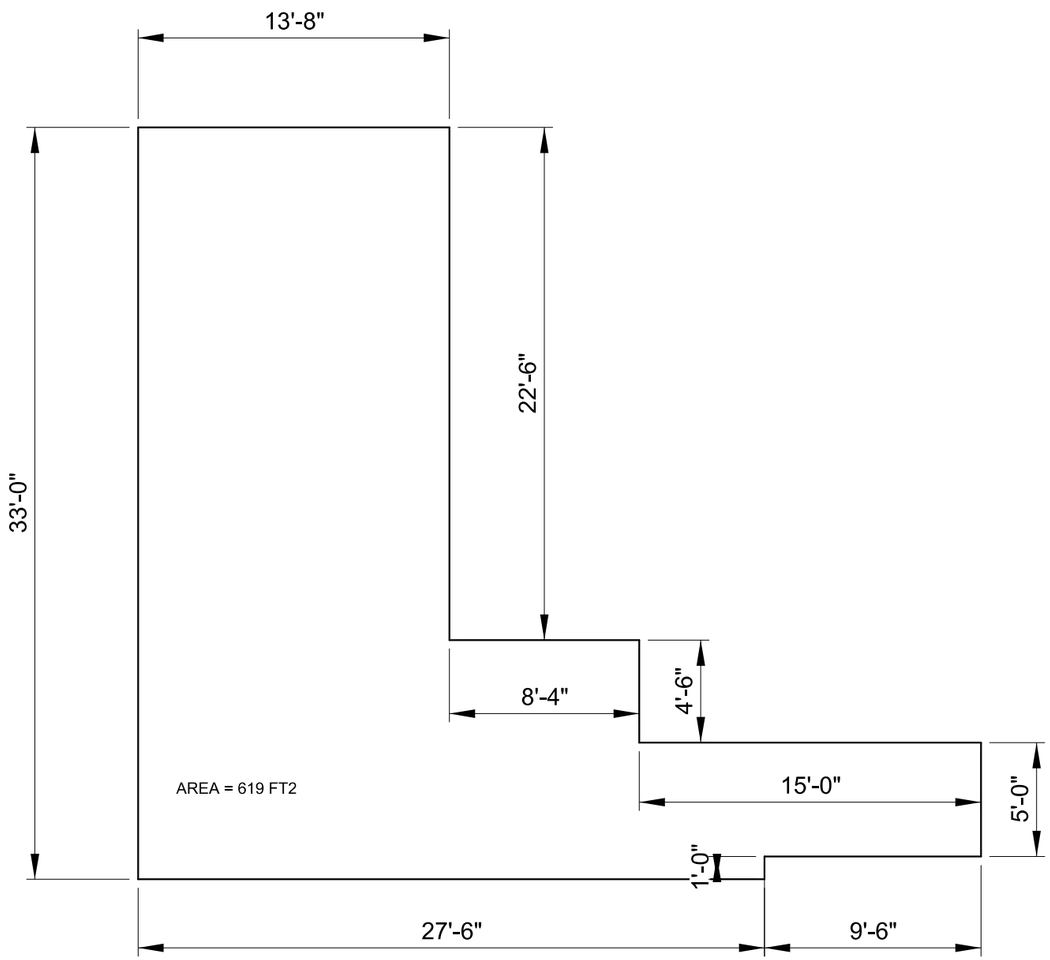

SECTION F-F LOOKING BEHIND

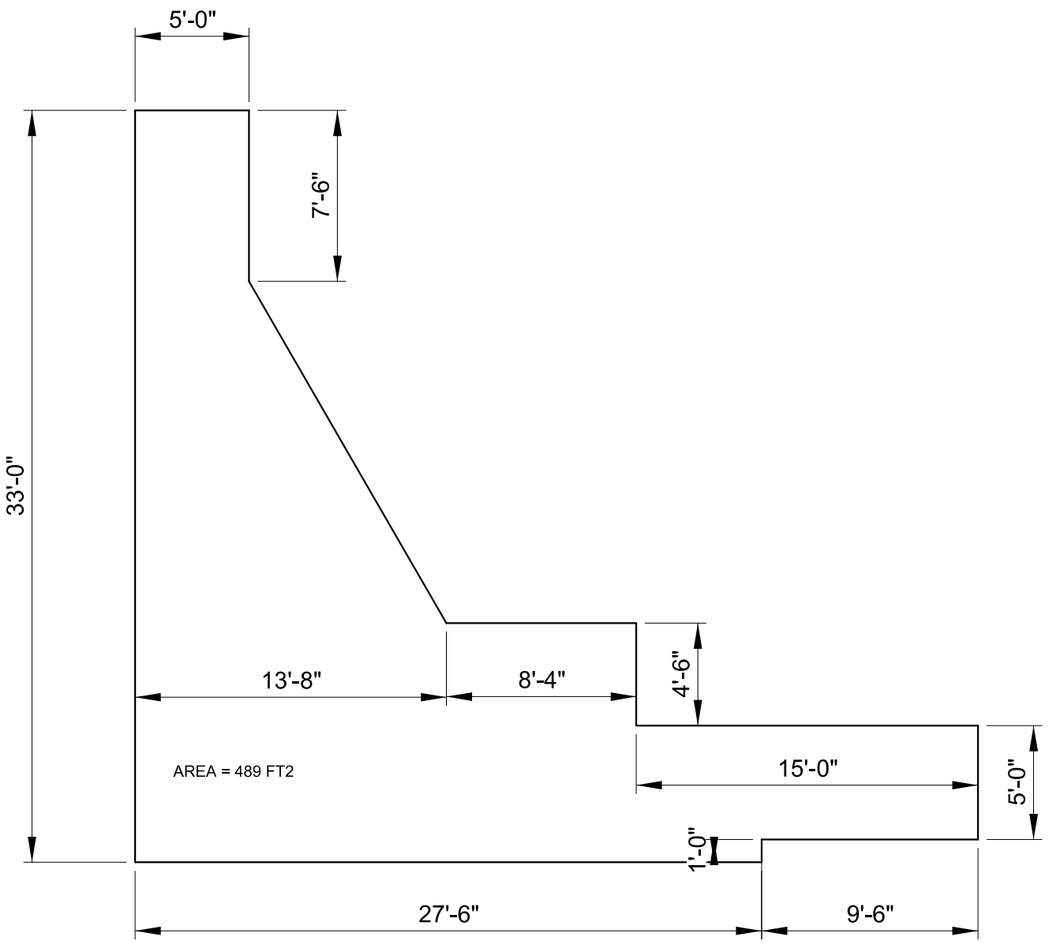

SECTION F-F LOOKING AHEAD

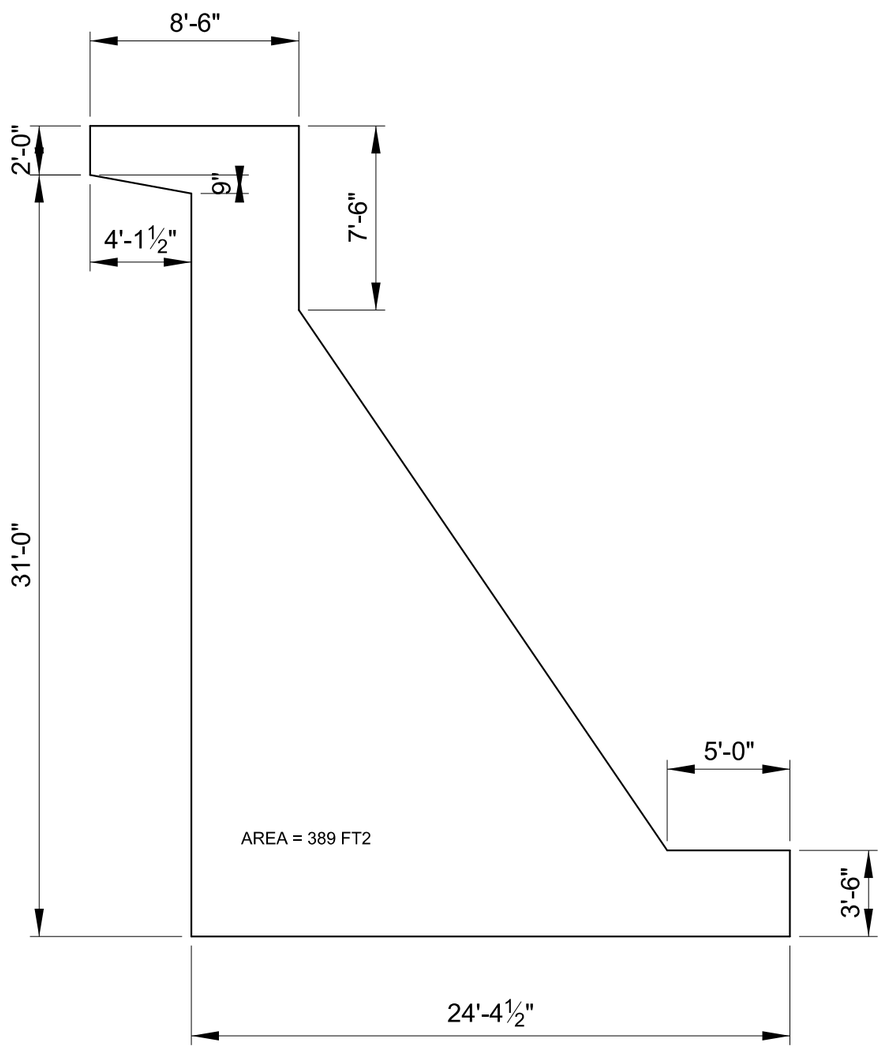

SECTION H-H

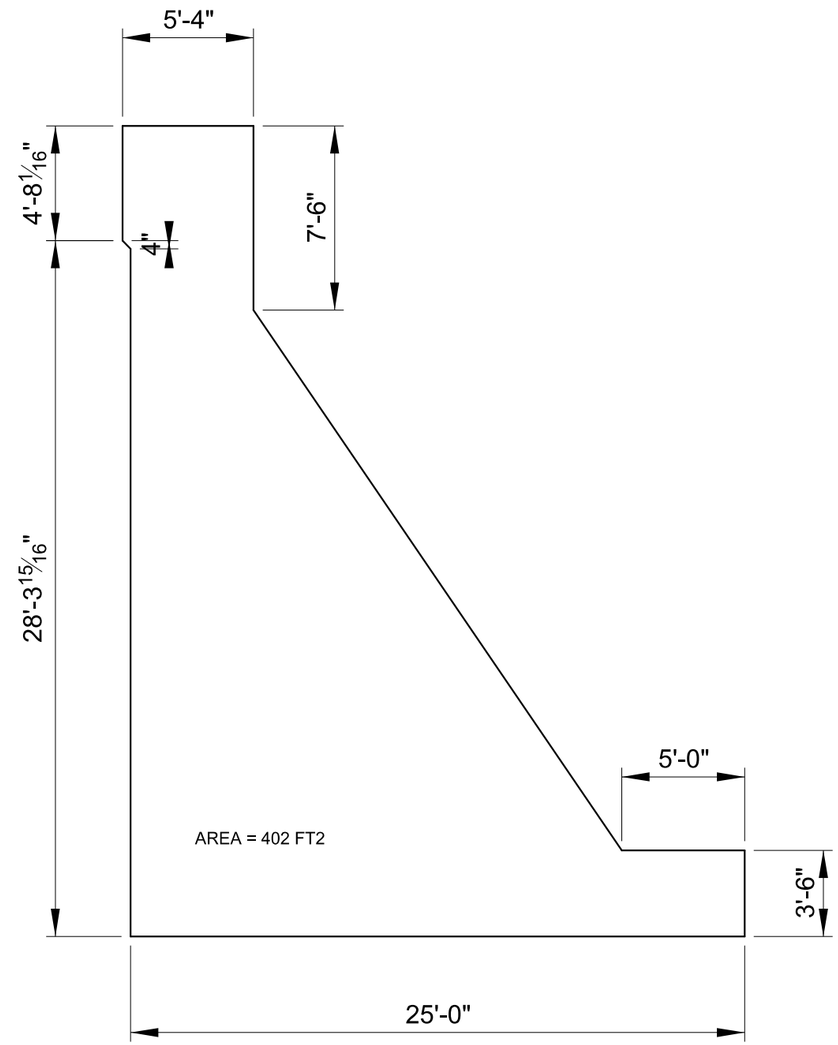

SECTION G-G

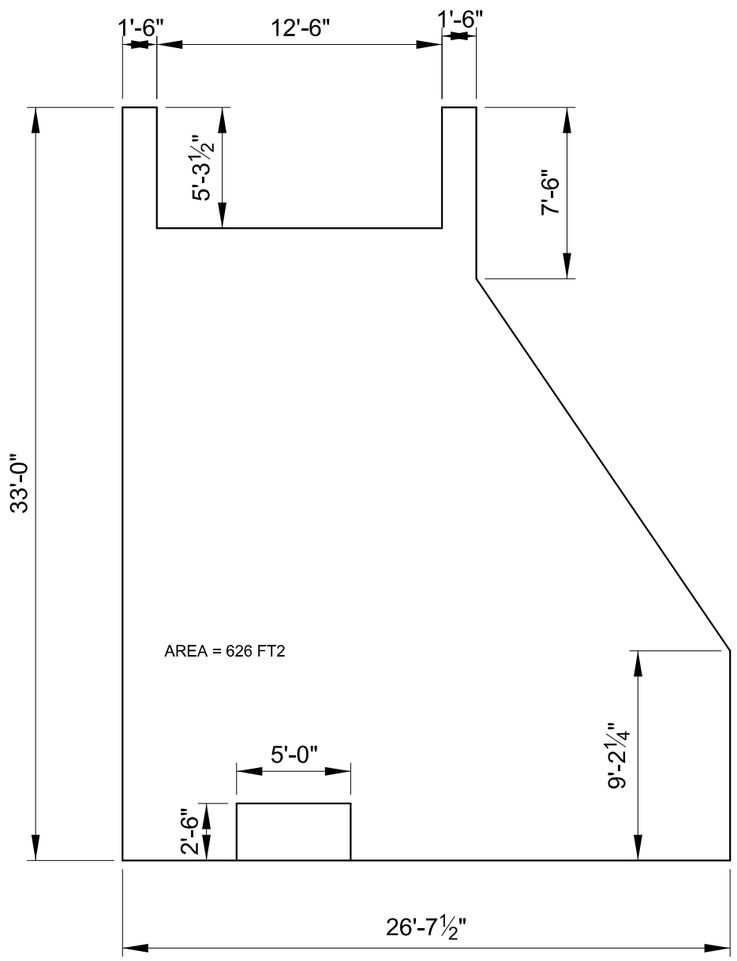

SECTION J-J APPROXIMATE
TO BE AVERAGED WITH SECTION K-K

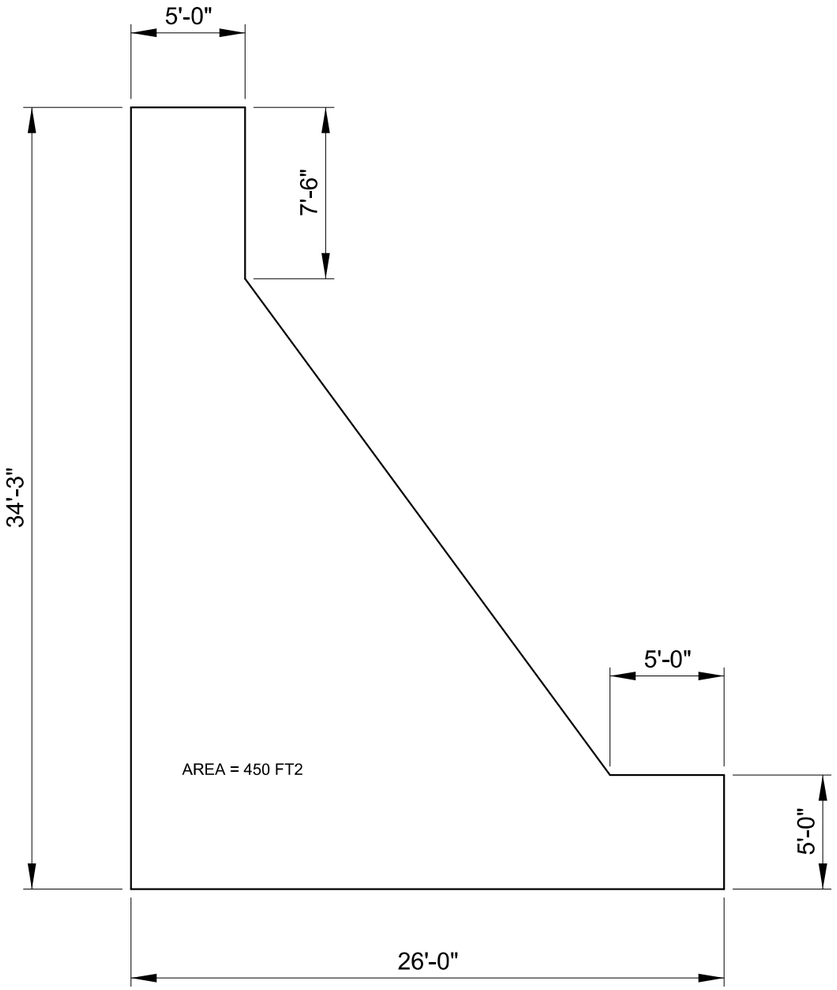

SECTION K-K
TO BE AVERAGED WITH SECTION J-J

SECTOR GATE CONCRETE QUANTITY TAKEOFF

Wall Quantities (Per Gatebay)

Wall Areas are measured from CADD drawing with wall geometry modified for wall thickness. Volume is equal to the height of the walls times the area of the walls. All wall thicknesses were designed for, no pro-rating was used

$Area\_Walls := 3000ft^2$

$Top\_of\_Wall := 16ft$

$Sill\_Elevation := -16ft$

$Volume := Area\_Walls \cdot (Top\_of\_Wall - Sill\_Elevation) = 3.556 \times 10^3 \cdot yd^3$

Slab Quantities (Per Gatebay)

*Slab Areas are measured from CADD drawing with wall geometry modified for wall thickness. Volume is equal to the slab thickness times the area of the slab.

$Slab\_Thickness := 10ft$

$Area\_Slab := 32755ft^2$

$Volume := Slab\_Thickness \cdot Area\_Slab = 1.213 \times 10^4 \cdot yd^3$

Stabilization Slab Quantities

Included in Cofferdam Quantities